PEDESTRIAN SAFETY IMPROVEMENTS

MAIN STREET SOUTH AND POVERTY ROAD
SOUTHBURY, CONNECTICUT

SLR PROJECT #12097.00034
STATE PROJECT #0130-0194
FEDERAL AID PROJECT #1130(005)
FINAL DESIGN PLANS
JULY 31, 2025

SURVEY NOTES

1. THIS SURVEY HAS BEEN PREPARED PURSUANT TO THE REGULATIONS OF CONNECTICUT STATE AGENCIES SECTIONS 20-300b-1 THROUGH 20-300b-20 AND THE "STANDARDS AND SUGGESTED METHODS AND PROCEDURES FOR SURVEYS AND MAPS IN THE STATE OF CONNECTICUT" AS ADOPTED BY THE CONNECTICUT ASSOCIATION OF LAND SURVEYORS, INC. ON AUGUST 29, 2019 IT IS A TOPOGRAPHIC SURVEY CONFORMING TO TOPOGRAPHIC ACCURACY CLASS T-2, AND IS INTENDED TO DEPICT THE EXISTING CONDITIONS OF THE SITE.
2. NORTH IS BASED UPON THE CONNECTICUT COORDINATE SYSTEM (NAD 1983).
3. ELEVATIONS, CONTOURS, AND BENCHMARKS ARE BASED UPON NAVD 1988.

GENERAL NOTES

1. INFORMATION REGARDING THE LOCATION OF EXISTING UTILITIES HAS BEEN BASED UPON AVAILABLE INFORMATION AND MAY BE INCOMPLETE, AND WHERE SHOWN SHOULD BE CONSIDERED APPROXIMATE. THE LOCATION OF ALL EXISTING UTILITIES SHOULD BE CONFIRMED PRIOR TO BEGINNING CONSTRUCTION. CALL "CALL BEFORE YOU DIG", 811 OR WWW.CBYD.COM AT LEAST TWO FULL WORKING DAYS PRIOR TO THE START OF CONSTRUCTION. ALL UTILITY LOCATIONS THAT DO NOT MATCH THE VERTICAL OR HORIZONTAL CONTROL SHOWN ON THE PLANS SHALL IMMEDIATELY BE BROUGHT TO THE ATTENTION OF THE ENGINEER FOR RESOLUTION.
2. SLR INTERNATIONAL CORPORATION ACCEPTS NO RESPONSIBILITY FOR THE ACCURACY OF MAPS AND DATA WHICH HAVE BEEN SUPPLIED BY OTHERS.
3. ALL DIMENSIONS AND ELEVATIONS SHALL BE VERIFIED IN THE FIELD PRIOR TO CONSTRUCTION. ANY DISCREPANCIES SHALL BE BROUGHT TO THE ATTENTION OF THE ENGINEER.
4. SEDIMENT AND EROSION CONTROL MEASURES AS DEPICTED ON THESE PLANS AND DESCRIBED WITHIN THE SEDIMENT AND EROSION CONTROL NARRATIVE SHALL BE IMPLEMENTED AND MAINTAINED UNTIL PERMANENT COVER AND STABILIZATION IS ESTABLISHED. ALL SEDIMENT AND EROSION CONTROL MEASURES SHALL CONFORM TO THE "CONNECTICUT GUIDELINES FOR SOIL EROSION AND SEDIMENT CONTROL" AND IN ALL CASES BEST MANAGEMENT PRACTICES SHALL PREVAIL.
5. ALL DISTURBED AREAS SHALL RECEIVE A MINIMUM OF 4" TOPSOIL, AND BE SEEDED WITH GRASS UNLESS OTHERWISE NOTED ON THE PLANS.
6. ALL PROPOSED CONTOURS AND SPOT ELEVATIONS INDICATE FINISHED GRADE.
7. ALL CONSTRUCTION MATERIALS AND METHODS SHALL CONFORM TO THE TOWN OF SOUTHBURY REQUIREMENTS AND TO THE APPLICABLE SECTIONS OF THE STATE OF CONNECTICUT DEPARTMENT OF TRANSPORTATION STANDARD SPECIFICATIONS FOR ROADS, BRIDGES, FACILITIES, AND INCIDENTAL CONSTRUCTION, FORM 819 AND JANUARY 2025 SUPPLEMENTAL ADDENDUMS.
8. THE PLANS REQUIRE A CONTRACTOR'S WORKING KNOWLEDGE OF LOCAL, MUNICIPAL, WATER AUTHORITY, AND STATE CODES FOR UTILITY SYSTEMS. ANY CONFLICTS BETWEEN MATERIALS AND LOCATIONS SHOWN, AND LOCAL REQUIREMENTS SHALL BE BROUGHT TO THE ATTENTION OF THE ENGINEER PRIOR TO THE EXECUTION OF WORK. THE ENGINEER WILL NOT BE HELD LIABLE FOR COSTS INCURRED TO IMPLEMENT OR CORRECT WORK WHICH DOES NOT CONFORM TO LOCAL CODE.
9. ALL FUEL, OIL, PAINT, OR OTHER HAZARDOUS MATERIALS USED DURING CONSTRUCTION SHOULD BE STORED IN A SECONDARY CONTAINER AND REMOVED TO A LOCKED INDOOR AREA WITH AN IMPERVIOUS FLOOR DURING NON-WORK HOURS.
10. COMPLIANCE WITH THE PERMIT CONDITIONS IS THE RESPONSIBILITY OF BOTH THE CONTRACTOR AND THE PERMITTEE.
11. ALL SIGNS AND PAVEMENT MARKINGS MUST CONFORM TO THE "MANUAL ON UNIFORM TRAFFIC CONTROL DEVICES," THE LATEST STATE OF CONNECTICUT CATALOG OF SIGNS AND STANDARD AS REVISED.
12. ALL CONSTRUCTED PEDESTRIAN RAMPS SHALL MEET APPLICABLE ACCESSIBILITY CODES AND SHALL COMPLY WITH CTDOT CONSTRUCTION DETAILS. ANY RAMPS NOT MEETING CODES AND DETAILS SHALL BE REMOVED AND REPLACED BY THE CONTRACTOR AT NO COST TO THE TOWN.
13. PROCESSED AGGREGATE BASE SHALL BE USED UNDER ALL CONCRETE SIDEWALKS. ANY REFERENCE TO GRANULAR FILL OR COMPACTED GRANULAR FILL IN THE CONTRACT DOCUMENTS SHALL BE REVISED TO PROCESSED AGGREGATE BASE.
14. ALL PROPOSED SIDEWALK ALIGNMENTS INCLUDING BASELINES AND ELEVATIONS SHALL BE STAKED BY A CT-LICENSED LAND SURVEYOR TO BE PAID FOR UNDER THE ITEM "CONSTRUCTION SURVEYING". BASELINE FOR EACH STREET OR SIDEWALK SEGMENT SHALL BE STAKED IN ADVANCE OF THE WORK. CONTRACTOR SHALL ARRANGE AND PARTICIPATE IN A FIELD MEETING WITH TOWN AND THE TOWN'S ENGINEER TO CONFIRM THE ALIGNMENT PRIOR TO STARTING THE WORK. THE TOWN AND THE TOWN'S ENGINEER ACCEPT NO RESPONSIBILITY FOR THE ACCURACY OF THE SURVEY LAYOUT; THE MEETING SHALL SERVE TO REVIEW ANY PROPERTY ENCROACHMENTS AND UTILITY IMPACTS IN ADVANCE OF THE WORK.

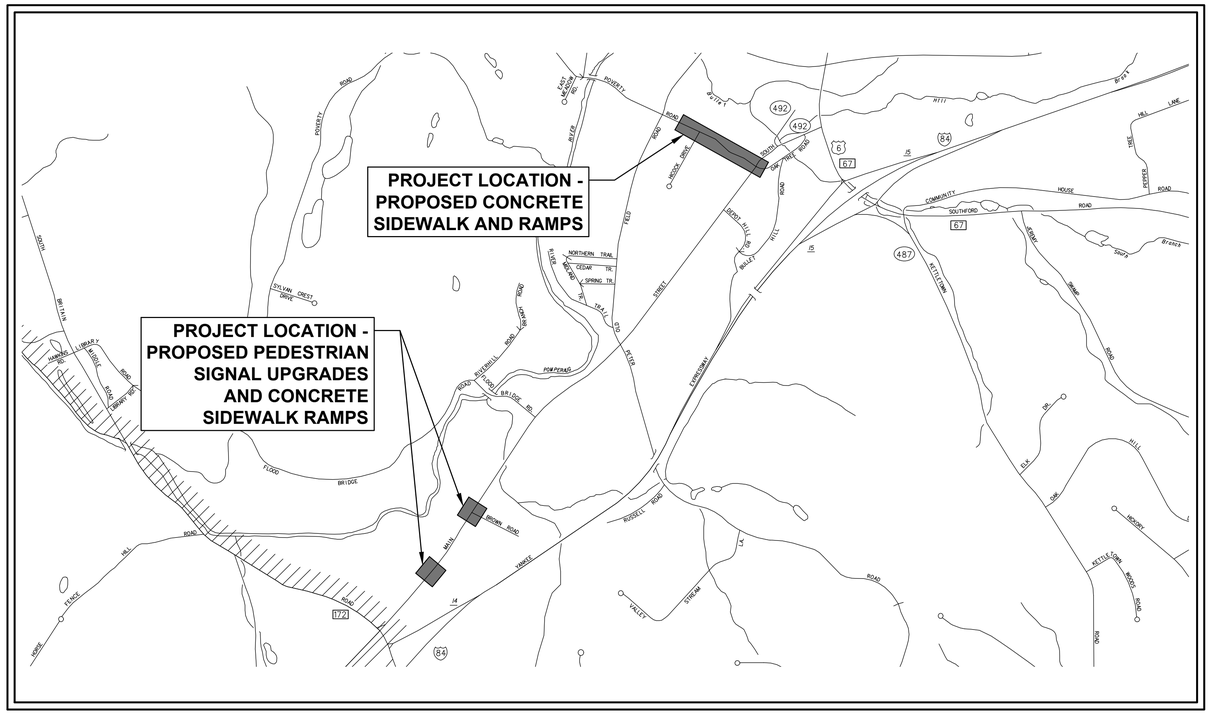

PROJECT SITE VICINITY MAP:

0' 30' 60'
0 1/2" 1"
SCALE 1" = 60'

LIST OF DRAWINGS

NO.	NAME	TITLE
01	--	TITLE SHEET
02	IND-01	INDEX PLAN
03	TYP-01	TYPICAL CROSS SECTIONS
04-05	EX-01 - EX-02	EXISTING CONDITIONS AND BASELINE LAYOUT PLANS
06-07	PLN-01 - PLN-02	SIDEWALK PLANS
08-09	TCS-01 - TCS-02	TRAFFIC CONTROL SIGNAL PLANS
10-11	PRO-01 - PRO-02	SIDEWALK PROFILE
12-13	XSC-01 - XSC-02	CROSS SECTIONS
14-20	MDS-01 - MDS-07	MISCELLANEOUS DETAILS
		CTDOT HIGHWAY STANDARD DETAILS
		CTDOT TRAFFIC STANDARD DETAILS

PREPARED FOR:

MATTHEW TARNOWSKI
TOWN OF SOUTHBURY
501 MAIN STREET SOUTH
SOUTHBURY, CONNECTICUT 06488

Know what's **below.**
Call before you dig.
www.cbyd.com

DESIGNED BY:

SLR
99 REALTY DRIVE
CHESHIRE, CT 06410
203.271.1773
SLRCONSULTING.COM

ANTHONY CIRIELLO JR., P.E.
CONN. PROFESSIONAL REG. NO. 20609

DATE: 10/13/2025

STATE OF CONNECTICUT
ANTHONY A. CIRIELLO, JR.
No. 20609
LICENSED
PROFESSIONAL ENGINEER

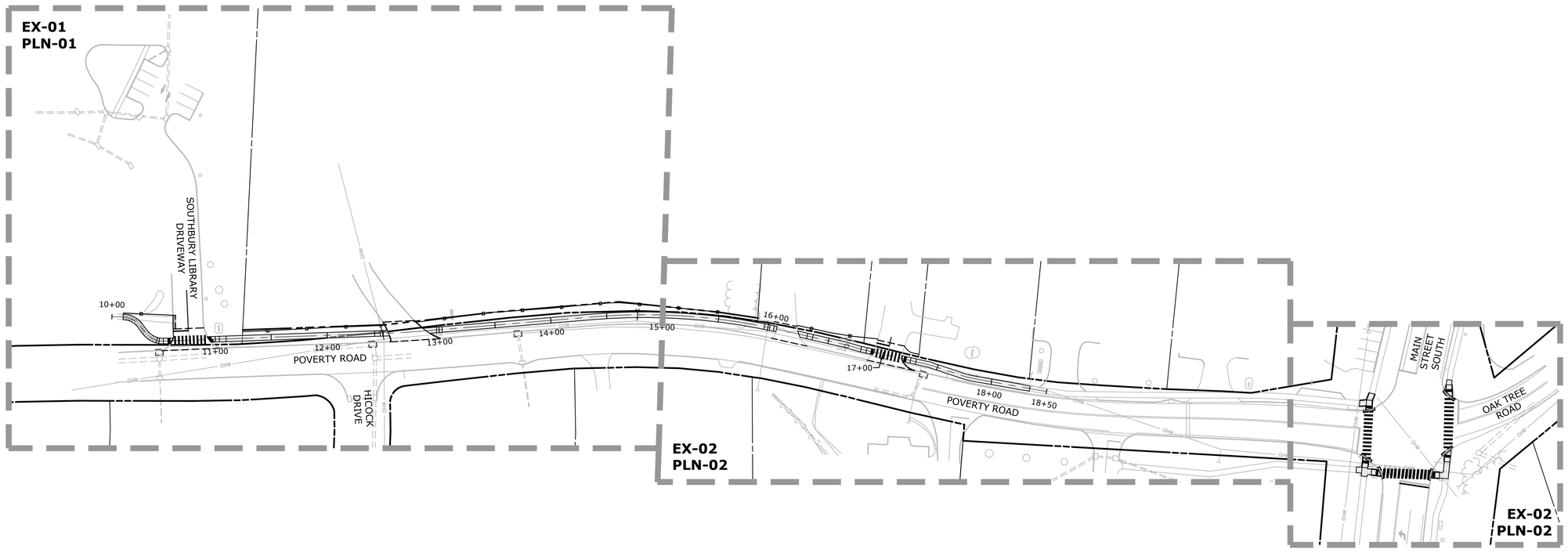

0' 25' 50'
0 1/2" 1"

SLR
99 REALTY DRIVE
CHESHIRE, CT 06410
203.271.1773
SLRCONSULTING.COM

DESCRIPTION	DATE	BY

INDEX PLAN

PEDESTRIAN SAFETY IMPROVEMENTS

MAIN STREET SOUTH AND POVERTY ROAD
SOUTHBURY, CONNECTICUT

MSM	ABW	MSM
DESIGNED	DRAWN	CHECKED

SCALE: 1"=50'

DATE: JULY 31, 2025

PROJECT NO.: 0130-0194

DRAWING NO.: IND-01

SHEET NO.: 02

LEGEND

1. 2" HMA S0.375 (TRAFFIC LEVEL 1)
2. 8" PROCESSED AGGREGATE BASE(COMPACTED IN 4" LIFTS)
3. 4" TOPSOIL AND TURF ESTABLISHMENT
4. 5" CONCRETE SIDEWALK
5. 3" HMA S0.375 (TRAFFIC LEVEL 1) (PLACED IN TWO EQUAL LIFTS)
6. 5" HMA S0.5 (TRAFFIC LEVEL 2) (PLACED IN TWO EQUAL LIFTS)
7. 12" PROCESSED AGGREGATE BASE (COMPACTED IN 4" LIFTS)

* 2% MAX CROSS SLOPE

NOTE:
SEE CONCRETE SIDEWALK AND
BITUMINOUS CONCRETE DRIVEWAY
DETAILS ON STANDARD SHEET NO.
HW-921-01 AND HW-922_01

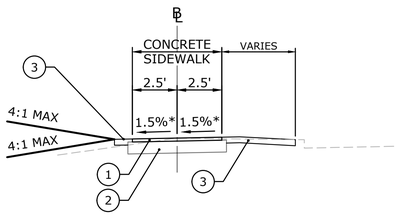

POVERTY ROAD
5' BITUMINOUS CONCRETE SIDEWALK
STA. 10+10 TO 10+48

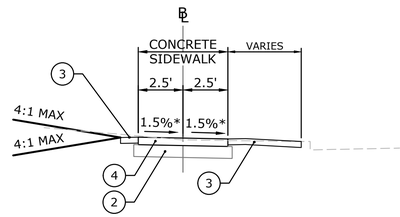

POVERTY ROAD
5' CONCRETE SIDEWALK
STA. 10+48 TO 11+75
STA. 17+00 TO 18+35

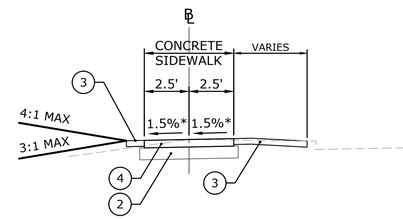

POVERTY ROAD
5' CONCRETE SIDEWALK
STA. 11+75 TO 17+00

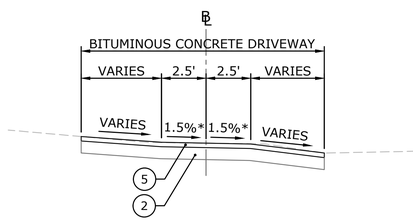

RESIDENTIAL DRIVEWAYS

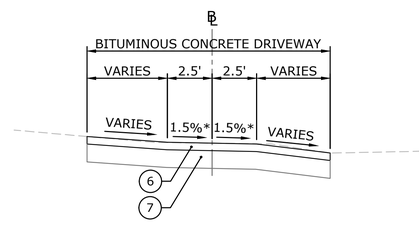

COMMERCIAL DRIVEWAYS

SLR
99 REALTY DRIVE
CHESHIRE, CT 06410
203.271.1773
SLRCONSULTING.COM

DESCRIPTION	DATE	BY

TYPICAL CROSS SECTIONS
PEDESTRIAN SAFETY IMPROVEMENTS
MAIN STREET SOUTH AND POVERTY ROAD
SOUTHBURY, CONNECTICUT

MSM	ABW	MSM
DESIGNED	DRAWN	CHECKED

SCALE: NOT TO SCALE
DATE: JULY 31, 2025
PROJECT NO.: 0130-0194
DRAWING NO.: TYP-01
SHEET NO.: 03

POVERTY ROAD SIDEWALK ALIGNMENT INFORMATION						
SEGMENT #	LENGTH	RADIUS	BEARING	TANGENT	DELTA	PI STATION
L1	10.000'		S60° 00' 37.69"E			
C1	17.904'	20.00'		9.60'	051°17'33"	10+19.60
L2	6.924'		S08° 43' 04.49"E			
C2	19.242'	20.00'		10.44'	055°07'29"	10+45.27
L3	202.463'		S63° 50' 33.17"E			
C3	28.802'	600.00'		14.40'	002°45'02"	12+70.94
L4	152.216'		S66° 35' 34.74"E			

EXISTING CONDITIONS LEGEND

- STREET LINE
- PROPERTY LINE
- OHW — OVER HEAD WIRE
- W — WATER LINE
- DRAINAGE MANHOLE
- TELEPHONE MANHOLE
- MANHOLE
- CATCH BASIN
- WV — WATER VALVE
- EM — ELECTRIC METER
- PCP — PEDESTRIAN CROSSING POST
- UTILITY POLE
- SUPPORT POLE
- GUY WIRE
- HYDRANT
- LIGHT POST
- SIGN

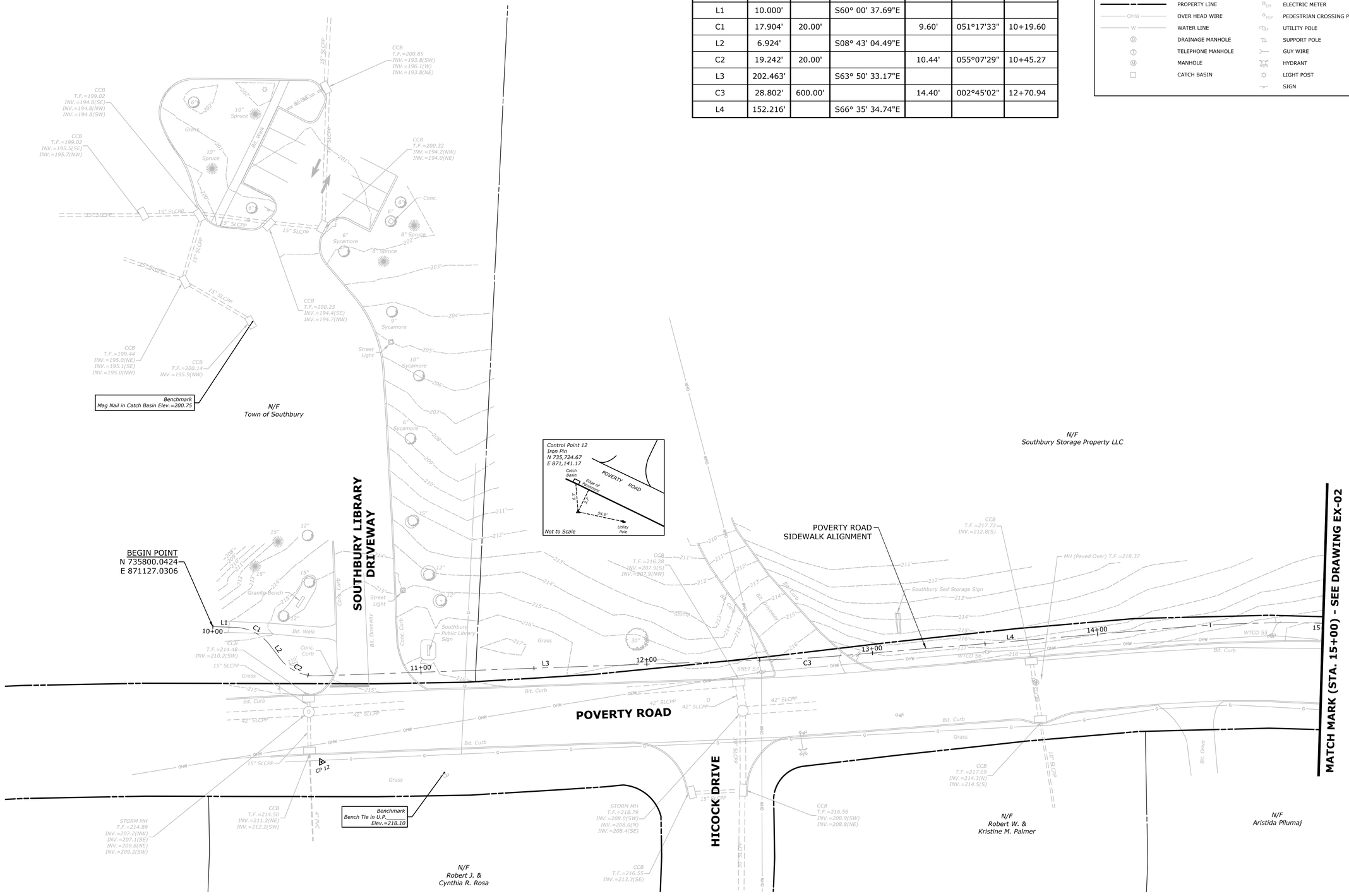

SLR
99 REALTY DRIVE
CHESHIRE, CT 06410
203.271.1773
SLRCONSULTING.COM

DESCRIPTION	DATE	BY

EXISTING CONDITIONS AND BASELINE LAYOUT PLANS

PEDESTRIAN SAFETY IMPROVEMENTS

MAIN STREET SOUTH AND POVERTY ROAD
SOUTHBURY, CONNECTICUT

MSM	ABW	MSM
DESIGNED	DRAWN	CHECKED

SCALE: 1"=20'

DATE: JULY 31, 2025

PROJECT NO.: 0130-0194

DRAWING NO.: EX-01

SHEET NO.: 04

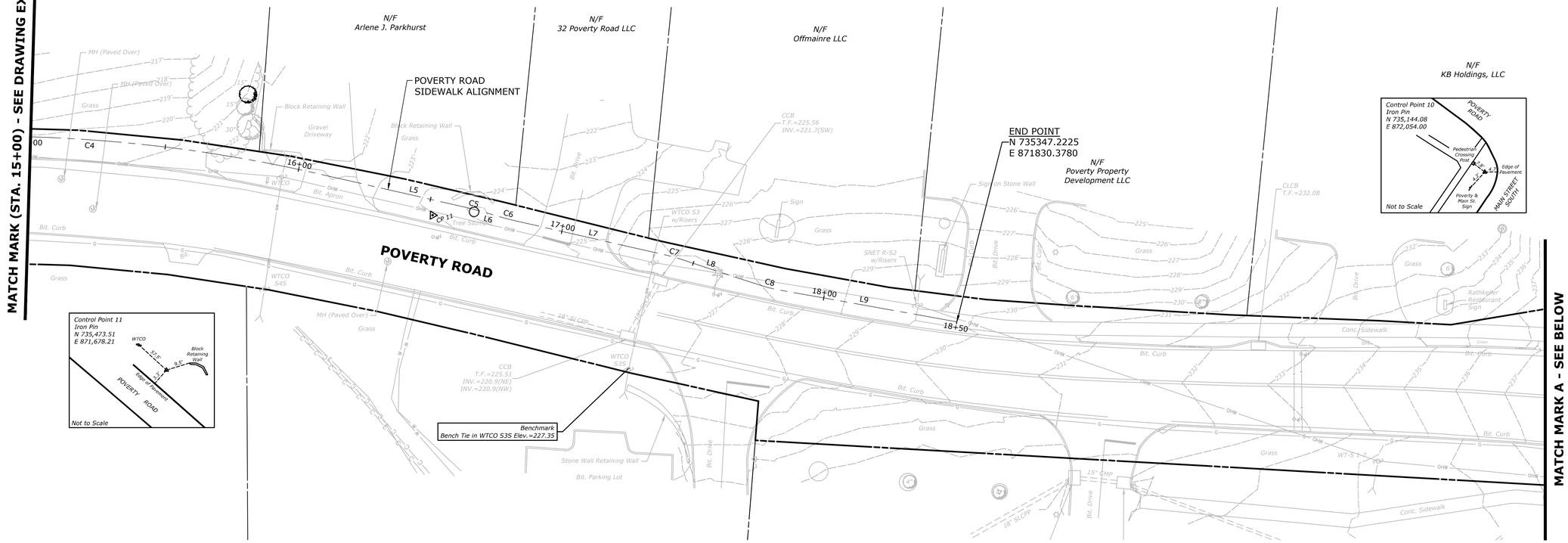

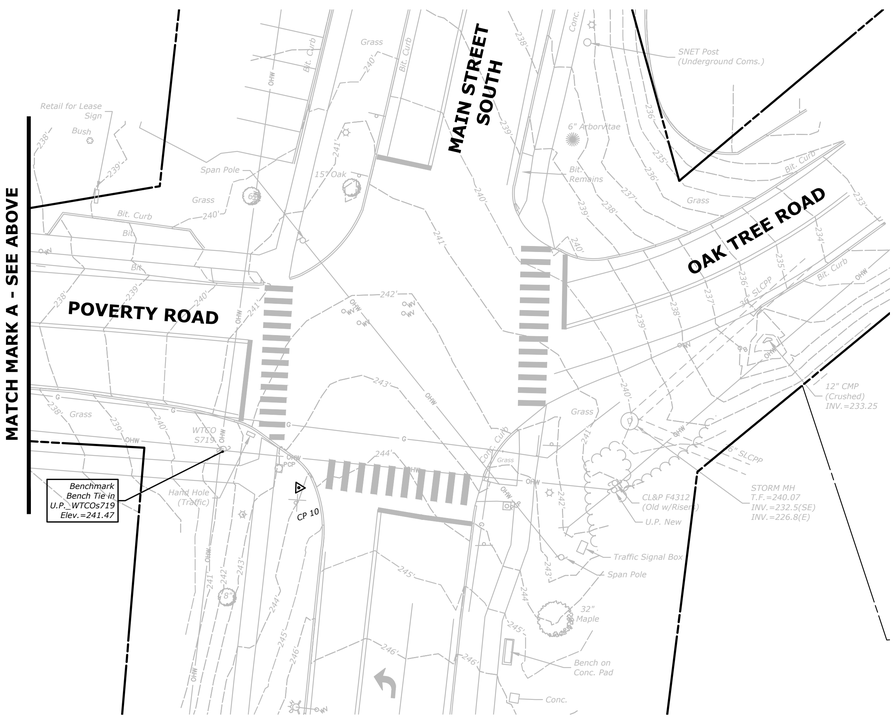

POVERTY ROAD SIDEWALK ALIGNMENT INFORMATION						
SEGMENT #	LENGTH	RADIUS	BEARING	TANGENT	DELTA	PI STATION
C4	168.995'	550.00'		85.17'	017°36'18"	15+22.72
L5	57.830'		S48° 59' 17.19"E			
C5	2.968'	50.00'		1.48'	003°24'05"	16+65.86
L6	10.515'		S45° 35' 12.23"E			
C6	2.968'	50.00'		1.48'	003°24'05"	16+79.34
L7	59.207'		S48° 59' 17.19"E			
C7	4.697'	50.00'		2.35'	005°22'58"	17+42.38
L8	31.130'		S43° 36' 19.04"E			
C8	7.019'	50.00'		3.52'	008°02'36"	17+79.38
L9	67.119'		S51° 38' 54.93"E			

EXISTING CONDITIONS LEGEND

	STREET LINE	WV	WATER VALVE
	PROPERTY LINE	EM	ELECTRIC METER
OHW	OVER HEAD WIRE	PCP	PEDESTRIAN CROSSING POST
W	WATER LINE		UTILITY POLE
D	DRAINAGE MANHOLE		SUPPORT POLE
T	TELEPHONE MANHOLE		GUY WIRE
M	MANHOLE		HYDRANT
	CATCH BASIN		LIGHT POST
			SIGN

SLR
99 REALTY DRIVE
CHESHIRE, CT 06410
203.271.1773
SLRCONSULTING.COM

DESCRIPTION	DATE	BY

EXISTING CONDITIONS AND BASELINE LAYOUT PLANS

PEDESTRIAN SAFETY IMPROVEMENTS

MAIN STREET SOUTH AND POVERTY ROAD
SOUTHBURY, CONNECTICUT

MSM	ABW	MSM
DESIGNED	DRAWN	CHECKED

SCALE: 1"=20'

DATE: JULY 31, 2025

PROJECT NO.: 0130-0194

DRAWING NO.: EX-02

SHEET NO.: 05

GENERAL NOTES

1. THE CONTRACTOR SHALL SUBMIT SHOP DRAWINGS FOR EACH SIDEWALK RAMP DETECTING SPOT ELEVATIONS AT EACH CORNER AND CHANGE IN CROSS SLOPE OR SLOPE DIRECTION. THE COST FOR CONCRETE SIDEWALK RAMP SHOP DRAWINGS SHALL BE INCLUDED IN THE COST FOR "CONCRETE SIDEWALK RAMP."

PAVEMENT MARKING NOTES

1. ALL NEW PAVEMENT MARKINGS SHALL BE EPOXY RESIN.
2. PAVEMENT MARKINGS SHALL BE INSTALLED IN ACCORDANCE WITH CTDOT STANDARD TRAFFIC DETAIL SHEET TR-1210_08 EXCEPT AS OTHERWISE DIMENSIONED OR NOTED ON THE PLANS.
3. ERADICATE ALL EXISTING CONFLICTING PAVEMENT MARKINGS.
4. ALL PAVEMENT MARKINGS ON TOWN ROADS SHALL BE MAINTAINED BY THE TOWN OF SOUTHBURY.

SIGNING NOTES

1. ALL EXISTING SIGNS WITHIN THE PROJECT LIMITS SHALL REMAIN UNLESS OTHERWISE NOTED.
2. SIGNS SHALL BE INSTALLED IN ACCORDANCE WITH CTDOT STANDARD TRAFFIC DETAIL SHEETS TR-1208_01 AND TR-1208_02.
3. EXACT SIGN LOCATION TO BE VERIFIED BY THE ENGINEER IN THE FIELD.
4. NEW SIGNS SHALL BE AT LEAST 10 FEET FROM UTILITY POLES.
5. ALL SIGNS ON TOWN ROADS SHALL BE MAINTAINED BY THE TOWN OF SOUTHBURY.

LEGEND

- CONCRETE SIDEWALK
- BITUMINOUS CONCRETE SIDEWALK
- BITUMINOUS CONCRETE DRIVEWAY (COMMERCIAL)
- BITUMINOUS CONCRETE DRIVEWAY (RESIDENTIAL)
- PAVEMENT REPAIR
- DETECTABLE WARNING SURFACE
- TOPSOIL AND TURF ESTABLISHMENT - LAWN
- SEDIMENT CONTROL SYSTEM AT CATCH BASIN
- SEDIMENTATION CONTROL SYSTEM
- CUT BITUMINOUS CONCRETE PAVEMENT
- PROPOSED EASEMENT
- CLEARING LIMITS
- GRADING LIMITS (CUT)
- GRADING LIMITS (FILL)

SCHEDULE OF RIGHTS AND EASEMENTS

A	EASEMENT TO SLOPE FOR THE SUPPORT OF THE SIDEWALK REQUIRED
G	RIGHT TO GRADE REQUIRED
H	RIGHT TO RECONSTRUCT DRIVEWAY REQUIRED
J	RIGHT TO INSTALL SEDIMENTATION CONTROL SYSTEM REQUIRED
V	EASEMENT TO CONSTRUCT AND MAINTAIN SIDEWALK REQUIRED
Y	RIGHT TO INSTALL PAVEMENT MARKINGS AND SIGNAGE REQUIRED

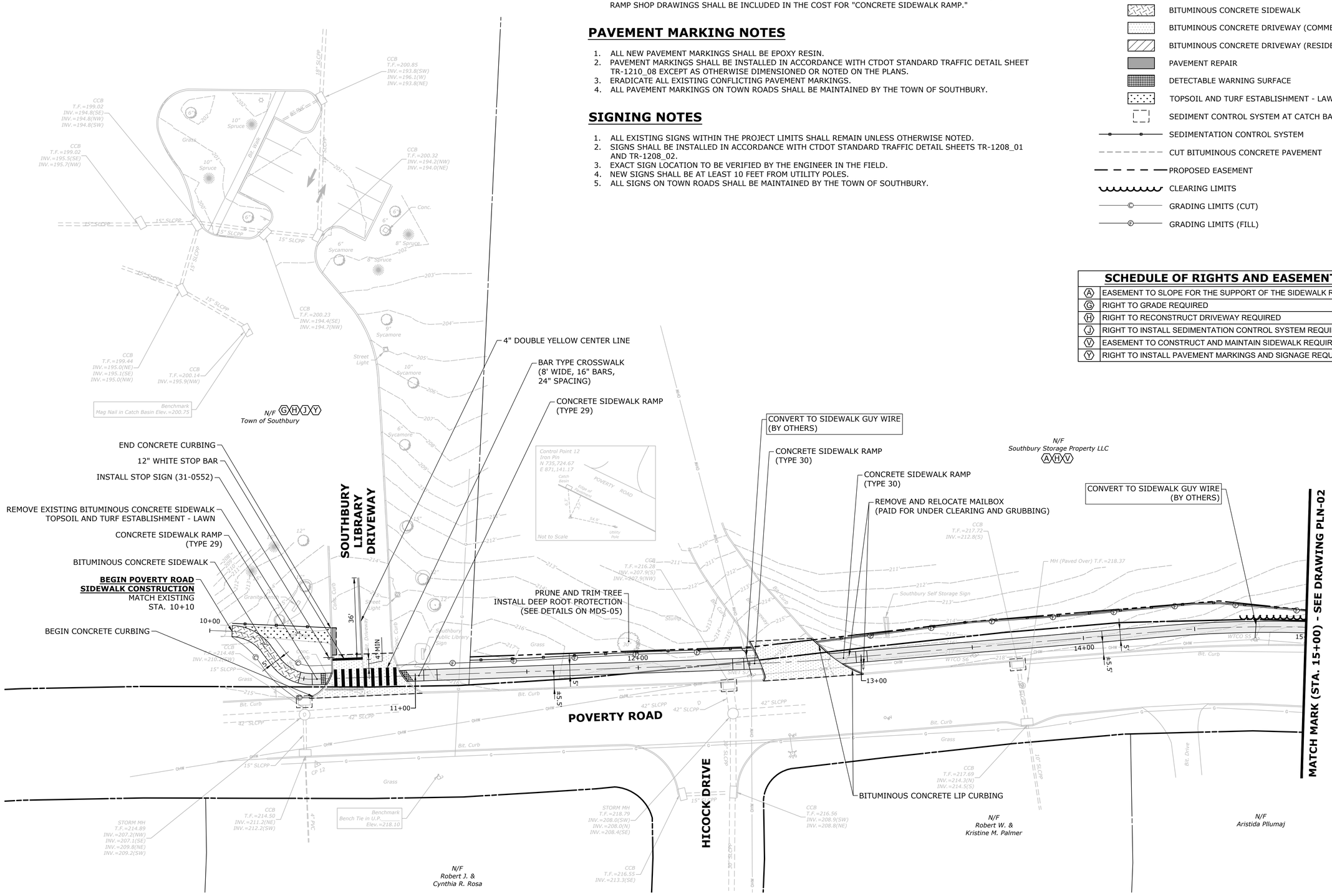

SLR
99 REALTY DRIVE
CHESHIRE, CT 06410
203.271.1773
SLRCONSULTING.COM

DESCRIPTION	DATE	BY

SIDEWALK PLANS
PEDESTRIAN SAFETY IMPROVEMENTS
MAIN STREET SOUTH AND POVERTY ROAD
SOUTHBURY, CONNECTICUT

MSM	ABW	MSM
DESIGNED	DRAWN	CHECKED

SCALE: 1"=20'
DATE: JULY 31, 2025
PROJECT NO.: 0130-0194
DRAWING NO.: PLN-01
SHEET NO.: 06

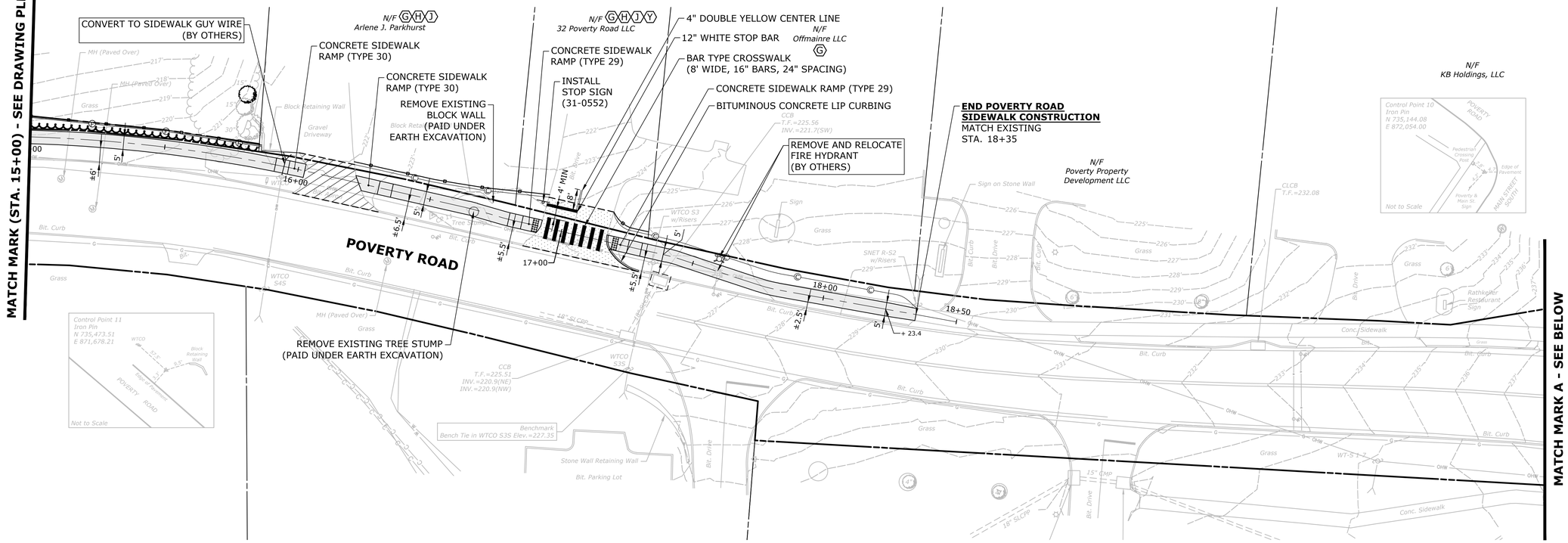

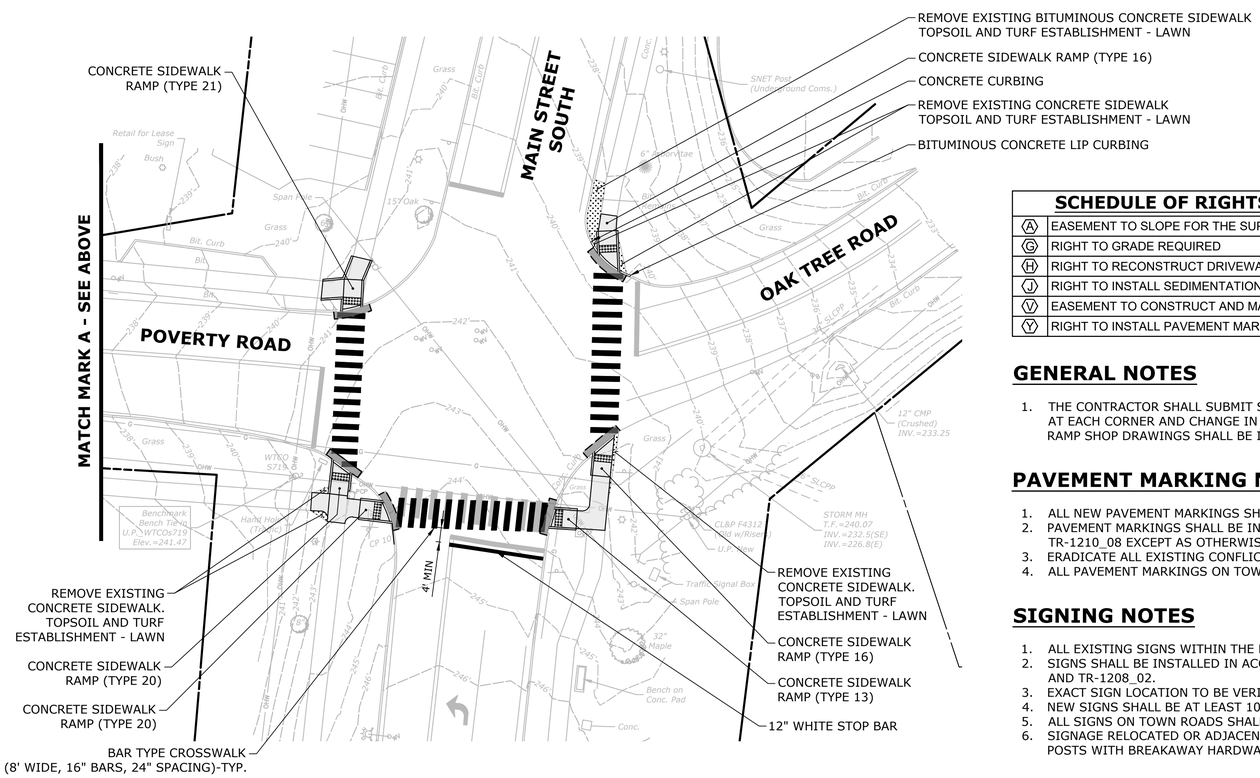

SCHEDULE OF RIGHTS AND EASEMENTS

A	EASEMENT TO SLOPE FOR THE SUPPORT OF THE SIDEWALK REQUIRED
G	RIGHT TO GRADE REQUIRED
H	RIGHT TO RECONSTRUCT DRIVEWAY REQUIRED
J	RIGHT TO INSTALL SEDIMENTATION CONTROL SYSTEM REQUIRED
V	EASEMENT TO CONSTRUCT AND MAINTAIN SIDEWALK REQUIRED
Y	RIGHT TO INSTALL PAVEMENT MARKINGS AND SIGNAGE REQUIRED

GENERAL NOTES

1. THE CONTRACTOR SHALL SUBMIT SHOP DRAWINGS FOR EACH SIDEWALK RAMP DETECTING SPOT ELEVATIONS AT EACH CORNER AND CHANGE IN CROSS SLOPE OR SLOPE DIRECTION. THE COST FOR CONCRETE SIDEWALK RAMP SHOP DRAWINGS SHALL BE INCLUDED IN THE COST FOR "CONCRETE SIDEWALK RAMP."

PAVEMENT MARKING NOTES

1. ALL NEW PAVEMENT MARKINGS SHALL BE EPOXY RESIN.
2. PAVEMENT MARKINGS SHALL BE INSTALLED IN ACCORDANCE WITH CTDOT STANDARD TRAFFIC DETAIL SHEET TR-1210_08 EXCEPT AS OTHERWISE DIMENSIONED OR NOTED ON THE PLANS.
3. ERADICATE ALL EXISTING CONFLICTING PAVEMENT MARKINGS.
4. ALL PAVEMENT MARKINGS ON TOWN ROADS SHALL BE MAINTAINED BY THE TOWN OF SOUTHBURY.

SIGNING NOTES

1. ALL EXISTING SIGNS WITHIN THE PROJECT LIMITS SHALL REMAIN UNLESS OTHERWISE NOTED.
2. SIGNS SHALL BE INSTALLED IN ACCORDANCE WITH CTDOT STANDARD TRAFFIC DETAIL SHEETS TR-1208_01 AND TR-1208_02.
3. EXACT SIGN LOCATION TO BE VERIFIED BY THE ENGINEER IN THE FIELD.
4. NEW SIGNS SHALL BE AT LEAST 10 FEET FROM UTILITY POLES.
5. ALL SIGNS ON TOWN ROADS SHALL BE MAINTAINED BY THE TOWN OF SOUTHBURY.
6. SIGNAGE RELOCATED OR ADJACENT TO THE NEWLY INSTALLED SIDEWALK SHALL BE RAISED AND PLACED ON POSTS WITH BREAKAWAY HARDWARE.

LEGEND

- CONCRETE SIDEWALK
- BITUMINOUS CONCRETE SIDEWALK
- BITUMINOUS CONCRETE DRIVEWAY (COMMERCIAL)
- BITUMINOUS CONCRETE DRIVEWAY (RESIDENTIAL)
- PAVEMENT REPAIR
- DETECTABLE WARNING SURFACE
- TOPSOIL AND TURF ESTABLISHMENT - LAWN
- SEDIMENT CONTROL SYSTEM AT CATCH BASIN
- SEDIMENTATION CONTROL SYSTEM
- CUT BITUMINOUS CONCRETE PAVEMENT
- PROPOSED EASEMENT
- CLEARING LIMITS
- GRADING LIMITS (CUT)
- GRADING LIMITS (FILL)

SLR
99 REALTY DRIVE
CHESHIRE, CT 06410
203.271.1773
SLRCONSULTING.COM

DESCRIPTION	DATE	BY

SIDEWALK PLANS

PEDESTRIAN SAFETY IMPROVEMENTS

MAIN STREET SOUTH AND POVERTY ROAD
SOUTHBURY, CONNECTICUT

MSM	ABW	MSM
DESIGNED	DRAWN	CHECKED

SCALE: 1"=20'

DATE: JULY 31, 2025

PROJECT NO.: 0130-0194

DRAWING NO.: PLN-02

SHEET NO.: 07

MOVEMENT DIAGRAM

NTOR		PHASE 1			PHASE 2			PHASE 3			PHASE 4			PHASE 5			PHASE 6			PHASE 7			PHASE 8					
NONE																												
	FLASH	GRN	CL	CL	GRN	CL	CL	GRN	CL	CL	GRN	CL	CL	GRN	CL	CL	GRN	CL	CL	GRN	CL	CL	GRN	CL	CL	GRN	CL	CL
FACE # 1	Y	←R	←Y R	R	R	R	R	R	R	R	R	R	R	R	R	R	G	Y	R									
2	Y	R	R	R	G	Y	R	R	R	R	R	R	R	R	R	R	R	R	R									
3	R	R →	R Y→	R	R	R	R	R	R	R	G	Y→ ③	R→ ④	R	R	R	R	R	R									
4	R	R	R	R	R	R	R	R	R	R	G	Y	R	R	R	R	R	R	R									
5	Y	R	R	R	G	Y	R	R	R	R	R	R	R	←R	←Y R	R	R	R	R									
6	Y	R	R	R	R	R	R	R	R	R	R	R	R	R	R	R	G	Y	R									
7	R	R	R	R	R	R	R	R	R	R	G	Y	R	R	R	R	R	R	R									
P	OFF	←DW→						WØ	←DW→																			
					←YIELD POINT												←YIELD POINT											
MIN.		5	2	1	15	2	1	15	2	0	15	2	1	5	2	1	15	2	1									
MAX.		18	5	3	40	5	3	35	5	3	35	5	3	18	5	3	40	5	3									
INTERVALS: MIN GRN		5			8						8			5			8											
WALK								7 ①	ACCESSIBLE PEDESTRIAN SIGNAL																			
PED CLR								23 ②																				
VEH EXT											3.0																	
MAX 1		5			25						8			5			25											
MAX 2		5			31						12			5			31											
YELLOW			3			3			4.0			3			3			3										
RED				1			1			0			1			1			1									
ADD INIT																												
MAX INIT																												
TBR																												
TTR																												
MIN GAP																												
MODE		LOCK			MAX RECALL			NON-LOCK			NON-LOCK			LOCK			MAX RECALL			OFF			OFF			OFF		
INIT START					THIS PHASE												THIS PHASE											

DETECTORS				SYSTEM LOC MASTER
IDENT	SIZE (WXL)	TYPE	MODE	
D1	6' X 50'	VIDEO	PRESENCE	
D4	6' X 50'	VIDEO	PRESENCE	
D4A	6' X 50'	VIDEO	PRESENCE	
D4B	6' X 50'	VIDEO	PRESENCE	
D4C	6' X 50'	VIDEO	DELAY 6"	
D5	6' X 50'	VIDEO	PRESENCE	

COORDINATION TYPE: TIME BASED

PROGRAM FUNCTION	TIME	DAYS	CYCLE	OFFSET SEC	OFFSET %	PHASE SPLITS SEC / % 01	02	03	04	05	06	07	08
FLASH	2300 – 0500	DAILY	FREE										
MAX1	ALL OTHER TIMES		FREE										
MAX 2	1500-1900	M-F	90"	0	0	9 11	29 34	30 38	12 15	9 11	35 39		
PATTERN 1	ALL OTHER TIMES		FREE			9 10	27 30	30 33	24 27	9 10	27 30		
PATTERN 2	0630-0930	M-F	90"	0	0	9 10	35 39	30 33	6 18	9 10	35 39		
PATTERN 3	1500-1900	M-F	90"	0	0	9 10	35 39	30 33	6 18	9 10	35 39		
PATTERN 4	1000-1400	SAT	90"	0	0								

PERMIS PERIOD 0	SEC

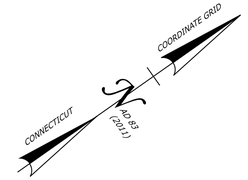

TECHNICAL NOTES	OFFICE RECORD
STANDARD OVERLAP SKIP FEATURES APPLY	REV # TIR # SM # SIGNAL REVISED:
① PERCUSSIVE TONE ONLY DURING FLASHING PEDESTRIAN CHANGE INTERVAL.	INSTALLED NEW PEDESTRIAN SIGNAL EQUIPMENT AND SIDEWALK RAMPS AND IMPLEMENTED
② COUNTDOWN ONLY DURING FLASHING PEDESTRIAN CHANGE INTERVAL.	EXCLUSIVE PEDESTRIAN PHASE.
③ TO BE Y IF PHASE 2 NEXT	
④ TO BE R IF PHASE 2 NEXT	

SIGNAL FACES

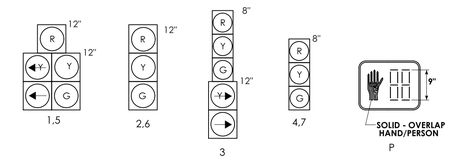

PHASING DIAGRAM

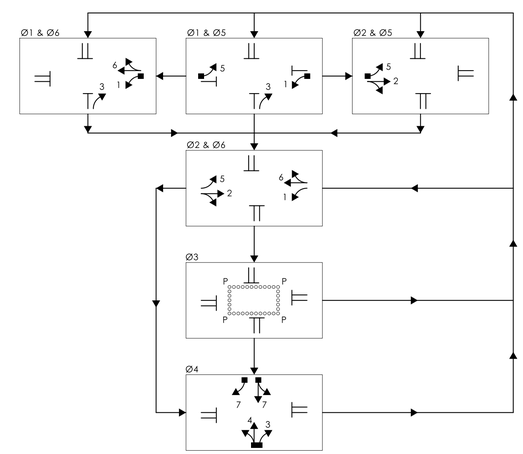

CONSTRUCTION NOTES

ALL TRAFFIC SIGNAL EQUIPMENT IS EXISTING EXCEPT AS NOTED.

STAKE ALL R.O.W. PRIOR TO EXCAVATION.

COORDINATE WITH UTILITY COMPANY REPRESENTATIVES LISTED IN THE SPECIAL PROVISIONS, 1.07-LEGAL RELATIONS AND RESPONSIBILITIES.

ANY PROPOSED REVISION TO THE LOCATION OF THE APPURTENANCES SHOWN ON THE PLAN MUST BE SUBMITTED FOR REVIEW AND APPROVAL BY THE TOWN OF SOUTHBURY PRIOR TO INSTALLATION.

THE LOCATION OF TRAFFIC SIGNAL FOUNDATIONS WHEN IN OR ADJACENT TO SIDEWALKS SHALL BE VERIFIED PRIOR TO INSTALLATION TO PROVIDE A CLEAR PATH OF NOT LESS THAN 4 FEET. IF A MINIMUM 4 FOOT FREE PATH IS UNAVAILABLE, NOTIFY THE ENGINEER AND CONTACT THE TOWN OF SOUTHBURY.

REMOVE ALL ABANDONED TRAFFIC SIGNAL EQUIPMENT PER SPECIAL PROVISIONS.

MODIFY EXISTING CONTROLLER TO ACCOMMODATE CHANGES. SUPPLY 3 PAPER COPIES OF REVISED CABINET WIRING DIAGRAMS AND EMAIL A PDF COPY TO DOT.SIGNALLAB@CT.GOV

(F) INSTALL NEW 8 FOOT ALUMINUM PEDESTAL WITH COUNTDOWN PEDESTRIAN SIGNAL AND APS PUSH BUTTON ON NEW FOUNDATION.

(G) MODIFY EXISTING HANDHOLE TO ACCOMODATE NEW CONDUIT.

(V) INSTALL CAST IRON HANDHOLE COVER.

(W) 30" X 30" HANDHOLE. ALL OTHERS TYPE II.

CLEAN EXISTING CONDUIT(S) WHERE NEW CABLE IS INSTALLED. WORK TO BE PAID FOR UNDER ITEM NO. 1008908A – CLEAN EXISTING CONDUIT.

CLEAN EXISTING HANDHOLE(S) WHERE NEW CABLE IS INSTALLED. WORK TO BE PAID FOR UNDER ITEM NO. 1010060A – CLEAN EXISTING HANDHOLE.

THE CONTRACTOR SHALL SUBMIT SHOP DRAWINGS FOR EACH SIDEWALK RAMP DETECTING SPOT ELEVATIONS AT EACH CORNER AND CHANGE IN CROSS SLOPE OR SLOPE DIRECTION. THE COST FOR CONCRETE SIDEWALK RAMP SHOP DRAWINGS SHALL BE INCLUDED IN THE COST FOR "CONCRETE SIDEWALK RAMP."

PAVEMENT MARKING NOTES

INSTALL NEW CROSSWALKS ON ALL LEGS.

ALL NEW PAVEMENT MARKINGS SHALL BE EPOXY RESIN.

PAVEMENT MARKINGS SHALL BE INSTALLED IN ACCORDANCE WITH CTDOT STANDARD TRAFFIC DETAIL SHEET TR-1210_08 EXCEPT AS OTHERWISE DIMENSIONED OR NOTED ON THE PLANS.

ERADICATE ALL EXISTING CONFLICTING PAVEMENT MARKINGS.

SIGN LEGEND

(A) EXISTING 31-0300 Z SPAN MTD.

(B) EXISTING 31-0349 Z

(C) EXISTING 31-0350 Z

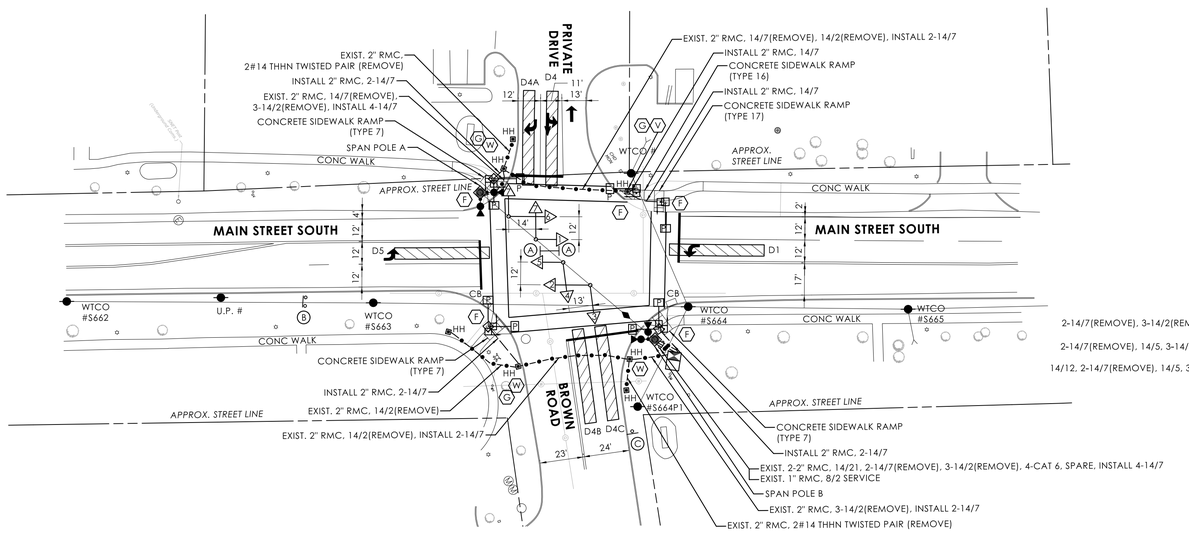

SPAN WIRE ELECTRICAL CALLOUTS

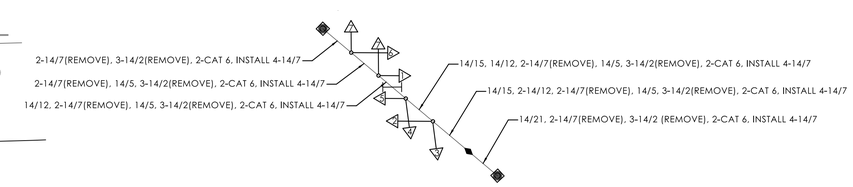

SPAN POLE INFORMATION

ID #	POLE LENGTH	BOLT CIRCLE	LOAD AT YIELD	YEAR INSTALLED
A	30'	20"	7800 LBS	1998
B	30'	20"	7800 LBS	1998

NOTES

TOWN OF SOUTHBURY TO MAINTAIN SIGNS AND PAVEMENT MARKINGS ON MAIN STREET SOUTH AND BROWN ROAD.

OTHERS TO MAINTAIN SIGNS PAVEMENT MARKINGS ON PRIVATE PROPERTY.

ALL CROSSWALKS ARE BAR TYPE.

(W) 30" X 30" HANDHOLE. ALL OTHERS TYPE II.

FINAL DESIGN

TOWN SIGNAL

SCALE: 1" = 40'

	TRAFFIC	DATE	ELECTRICAL	DATE	REV #	INTERSECTION # N/A
ENGINEER	SLR					
DRAWN BY					ENERGY BY - DEVELOPER	ADDRESS #
CHECKED BY						
SUBMITTED BY					MAINT LEVEL	SERVICE POLE - WTCO 665
APPROVED BY						
APPROVED DATE						UNMETERED SERVICE

REVISION DESCRIPTION | DATE | REV.

LEGEND: FL. FLASHING; R RED; Y YELLOW; G GREEN; RED ARROW; YELLOW ARROW; GREEN ARROW; WØ WALK/ PED. CLR; D.W. DON'T WALK; DET. LEADS IN SAW CUT; PROPOSED RMC; EXISTING RMC; CABLE CLOSURE; VC VIDEO CAMERA CABLE; RC RADAR CABLE; PROPOSED SUPPORT STRUCTURE; EXISTING STEEL SPAN POLE; PROPOSED UTILITY POLE; EXISTING UTILITY POLE; EXISTING WOOD SPAN POLE; PEDESTAL MOUNTING; PEDESTAL MOUNTED RRFB; PEDESTRIAN PUSH BUTTON & SIGN; DIRECTIONAL ARW. FOR PUSH BUTTON; PEDESTRIAN SIGNAL FACE; TRAFFIC SIGNAL FACE; PROPOSED HANDHOLE; EXISTING HANDHOLE; PROPOSED CONTROLLER; EXISTING CONTROLLER; AUXILIARY EQUIPMENT CABINET; OPTICAL DETECTOR; IP VIDEO DETECTOR; RADAR DETECTOR; THERMAL DETECTOR; AUDIO DETECTOR; 360° CAMERA ASSEMBLY; VIDEO THERMAL DETECTOR; DETECTION ZONE; LOOP DETECTOR; RADIO ANTENNA; POLE ANCHOR

CTDOT — CONNECTICUT DEPARTMENT OF TRANSPORTATION

MAIN STREET SOUTH AT BROWN ROAD
TOWN(S): SOUTHBURY, CONNECTICUT

DRAWING TITLE: **TRAFFIC CONTROL SIGNAL PLAN**

PROJECT NO.: 0130-0194

DRAWING NO.: TCS-01

SHEET NO.: 08

LASTED SAVED BY: awetmore FILE NAME: W:\CADDesign\12097.00034-DE\CAD\TCS-01.dgn
PLOTTED DATE: 7/8/2025

MOVEMENT DIAGRAM

NTOR: NONE

FACE #	FLASH	PHASE 1 GRN	PHASE 1 CL	PHASE 1 CL	PHASE 2 GRN	PHASE 2 CL	PHASE 2 CL	PHASE 3 GRN	PHASE 3 CL	PHASE 3 CL	PHASE 4 GRN	PHASE 4 CL	PHASE 4 CL
1	Y	←R	←Y R	R	R	R	R	R	R	R	R	R	R
2	Y	R	R	R	G	Y	R	R	R	R	R	R	R
3	R	R→	R Y→	R	R	R	R	R	R	R	G	Y→ (3)	R→ (4)
4	R	R	R	R	R	R	R	R	R	R	G	Y	R
5	Y	R	R	R	G	Y	R	R	R	R	R	R	R
6	Y	R	R	R	R	R	R	R	R	R	R	R	R
7	R	R	R	R	R	R	R	R	R	R	G	Y	R
P	OFF	←	DW				→	WØ	←				
						←YIELD POINT							
MIN.		5	2	1	15	2	1	25	2	0	15	2	1
MAX.		18	5	3	40	5	3	35	5	3	35	5	3

FACE #	PHASE 5 GRN	PHASE 5 CL	PHASE 5 CL	PHASE 6 GRN	PHASE 6 CL	PHASE 6 CL	PHASE 7 GRN	PHASE 7 CL	PHASE 7 CL	PHASE 8 GRN	PHASE 8 CL	PHASE 8 CL	GRN	CL	CL
1	R	R	R	G	Y	R									
2	R	R	R	R	R	R									
3	R	R	R	R	R	R									
4	R	R	R	R	R	R									
5	←R	←Y R	R	R	R	R									
6	R	R	R	G	Y	R									
7	R	R	R	R	R	R									
P	DW					→									
					←YIELD POINT										
MIN.	5	2	1	15	2	1									
MAX.	18	5	3	40	5	3									

INTERVALS	PHASE 1	PHASE 2	PHASE 3	PHASE 4	PHASE 5	PHASE 6	PHASE 7	PHASE 8	
MIN GRN	5	8	ACCESSIBLE PEDESTRIAN SIGNAL	8	5	8			
WALK			7 (1)						
PED CLR			21 (2)						
VEH EXT	1.0			3.0	1.0				
MAX 1	5	23		12	5	23			
MAX 2	5	29		8	5	29			
YELLOW	3	3	4.0	3	3	3			
RED	1	1	0	1	1	1			
ADD INIT									
MAX INIT									
TBR									
TTR									
MIN GAP									
MODE	LOCK	MAX RECALL	NON-LOCK	NON-LOCK	LOCK	MAX RECALL	OFF	OFF	OFF
INIT START		THIS PHASE				THIS PHASE			

DETECTORS

IDENT	SIZE (WXL)	TYPE	MODE
D1	6' X 6'	LOOPS	PRESENCE
D4,D4C	6' X 6'	LOOPS	PRESENCE
D4A	6' X 6'	LOOPS	DELAY, 6"
D4B	6' X 12'	LOOPS	DELAY, 6"
D5	6' X 6'	LOOPS	PRESENCE

SYSTEM LOC: MASTER

COORDINATION TYPE: TIME BASED

FUNCTION	PROGRAM TIME	DAYS	CYCLE	OFFSET SEC	OFFSET %	01	02	03	04	05	06	07	08	PERMIS PERIOD 0	SEC
FLASH	2200 - 0500	DAILY													
MAX1	ALL OTHER TIMES		FREE												
MAX 2	1500-1900	M-F	90"	72	88										
PATTERN 1	ALL OTHER TIMES		FREE			9 / 11	27 / 34	28 / 35	16 / 20	9 / 11	27 / 34				
PATTERN 2	0630-0930	M-F	90"	78	93	9 / 10	35 / 39	28 / 31	18 / 20	9 / 10	35 / 39				
PATTERN 3	1500-1900	M-F	90"	72	88	9 / 10	33 / 37	28 / 31	20 / 22	9 / 10	33 / 37				
PATTERN 4	1000-1400	SAT	90"	88	93	9 / 10	33 / 37	28 / 31	20 / 22	9 / 10	33 / 37				

(PHASE SPLITS SEC / %)

TECHNICAL NOTES

STANDARD OVERLAP SKIP FEATURES APPLY

(1) PERCUSSIVE TONE ONLY DURING FLASHING PEDESTRIAN CHANGE INTERVAL.

(2) COUNTDOWN ONLY DURING FLASHING PEDESTRIAN CHANGE INTERVAL.

(3) TO BE Y IF PHASE 2 NEXT

(4) TO BE R IF PHASE 2 NEXT

OFFICE RECORD

REV # TIR # SM # SIGNAL REVISED:

INSTALLED NEW PEDESTRIAN SIGNAL EQUIPMENT AND SIDEWALK RAMPS AND IMPLEMENTED EXCLUSIVE PEDESTRIAN PHASE.

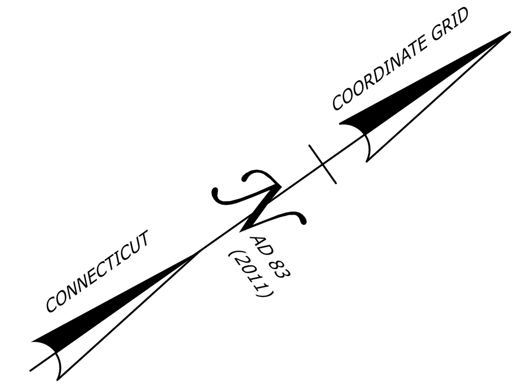

SIGNAL FACES

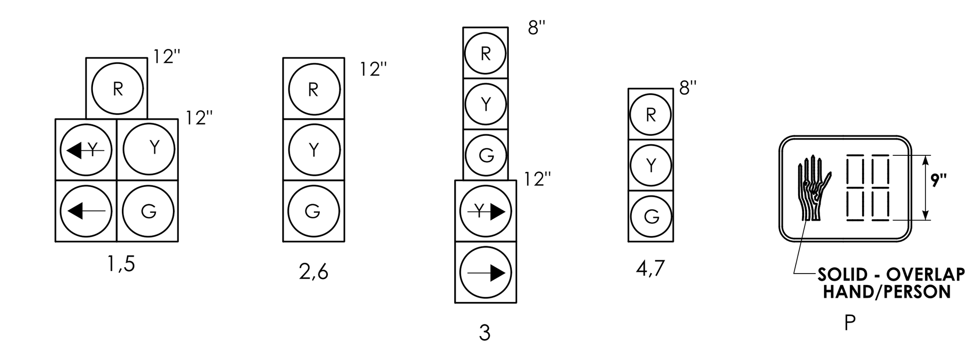

PHASING DIAGRAM

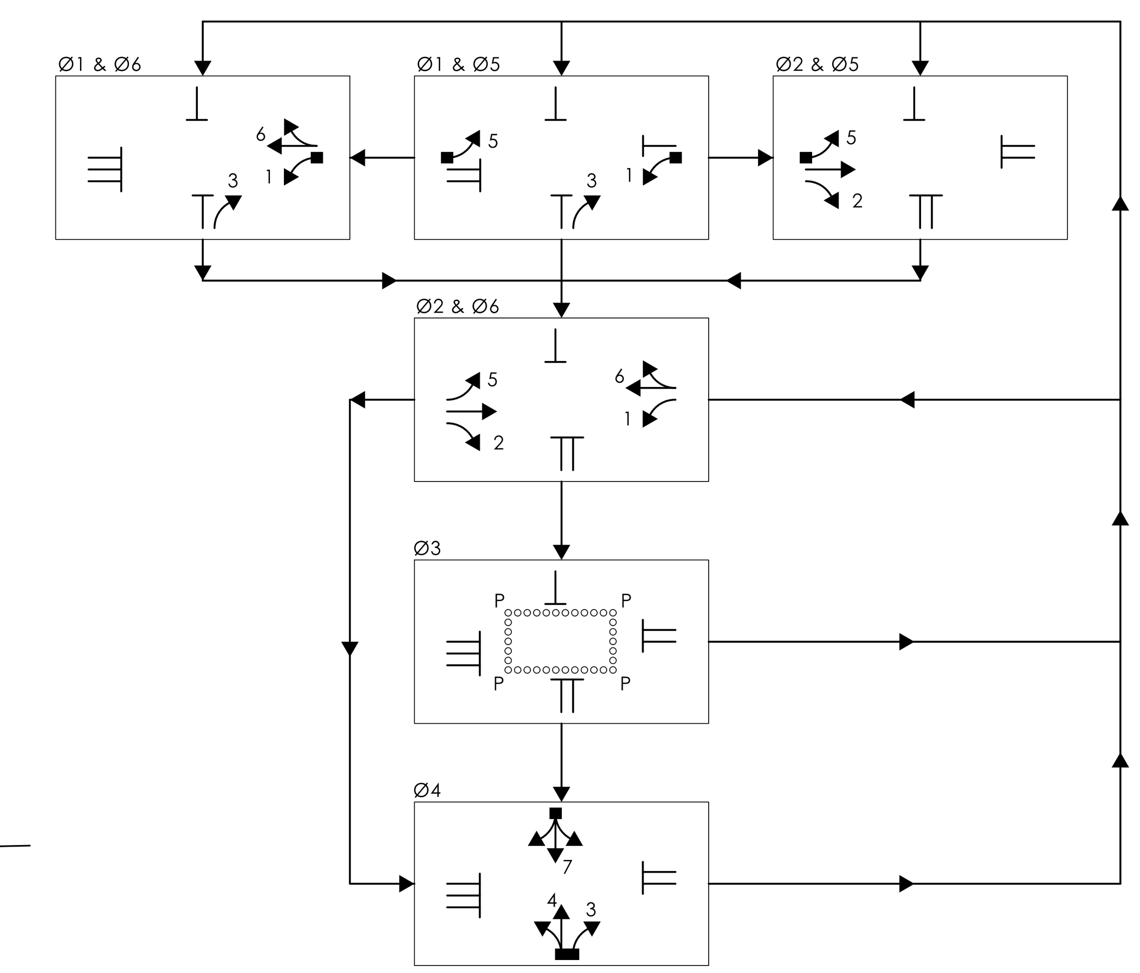

CONSTRUCTION NOTES

ALL TRAFFIC SIGNAL EQUIPMENT IS EXISTING EXCEPT AS NOTED.

STAKE ALL R.O.W. PRIOR TO EXCAVATION.

COORDINATE WITH UTILITY COMPANY REPRESENTATIVES LISTED IN THE SPECIAL PROVISIONS, 1.07-LEGAL RELATIONS AND RESPONSIBILITIES.

ANY PROPOSED REVISION TO THE LOCATION OF THE APPURTENANCES SHOWN ON THE PLAN MUST BE SUBMITTED FOR REVIEW AND APPROVAL BY THE TOWN OF SOUTHBURY PRIOR TO INSTALLATION.

THE LOCATION OF TRAFFIC SIGNAL FOUNDATIONS WHEN IN OR ADJACENT TO SIDEWALKS SHALL BE VERIFIED PRIOR TO INSTALLATION TO PROVIDE A CLEAR PATH OF NOT LESS THAN 4 FEET. IF A MINIMUM 4 FOOT FREE PATH IS UNAVAILABLE, NOTIFY THE ENGINEER AND CONTACT THE TOWN OF SOUTHBURY.

REMOVE ALL ABANDONED TRAFFIC SIGNAL EQUIPMENT PER SPECIAL PROVISIONS.

MODIFY EXISTING CONTROLLER TO ACCOMMODATE CHANGES. SUPPLY 3 PAPER COPIES OF REVISED CABINET WIRING DIAGRAMS AND EMAIL A PDF COPY TO DOT.SIGNALLAB@CT.GOV

(F) INSTALL NEW 8 FOOT ALUMINUM PEDESTAL WITH COUNTDOWN PEDESTRIAN SIGNAL AND APS PUSH BUTTON ON NEW FOUNDATION.

(G) MODIFY EXISTING HANDHOLE TO ACCOMODATE NEW CONDUIT.

(W) 30" X 30" HANDHOLE. ALL OTHERS TYPE II.

(X) INSTALL NEW APS PUSH BUTTON AND ONE WAY PEDESTRIAN SIGNAL HEAD ON EXISTING SPAN POLE AS SHOWN.

(Y) INSTALL NEW APS PUSH BUTTONS AND TWO WAY PEDESTRIAN SIGNAL HEADS ON EXISTING SPAN POLE AS SHOWN.

CLEAN EXISTING CONDUIT(S) WHERE NEW CABLE IS INSTALLED. WORK TO BE PAID FOR UNDER ITEM NO. 1008908A – CLEAN EXISTING CONDUIT.

CLEAN EXISTING HANDHOLE(S) WHERE NEW CABLE IS INSTALLED. WORK TO BE PAID FOR UNDER ITEM NO. 1010060A – CLEAN EXISTING HANDHOLE.

THE CONTRACTOR SHALL SUBMIT SHOP DRAWINGS FOR EACH SIDEWALK RAMP DETECTING SPOT ELEVATIONS AT EACH CORNER AND CHANGE IN CROSS SLOPE OR SLOPE DIRECTION. THE COST FOR CONCRETE SIDEWALK RAMP SHOP DRAWINGS SHALL BE INCLUDED IN THE COST FOR "CONCRETE SIDEWALK RAMP."

PAVEMENT MARKING NOTES

INSTALL NEW CROSSWALKS ON ALL LEGS.

ALL NEW PAVEMENT MARKINGS SHALL BE EPOXY RESIN.

PAVEMENT MARKINGS SHALL BE INSTALLED IN ACCORDANCE WITH CTDOT STANDARD TRAFFIC DETAIL SHEET TR-1210_08 EXCEPT AS OTHERWISE DIMENSIONED OR NOTED ON THE PLANS.

ERADICATE ALL EXISTING CONFLICTING PAVEMENT MARKINGS.

SIGN LEGEND

(A) EXISTING 31-0432 Z

(B) EXISTING SPAN MTD. 31-0300 Z

(C) EXISTING 31-0350 Z

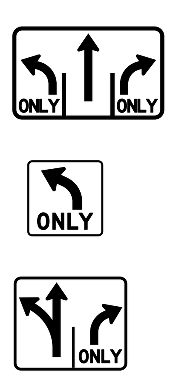

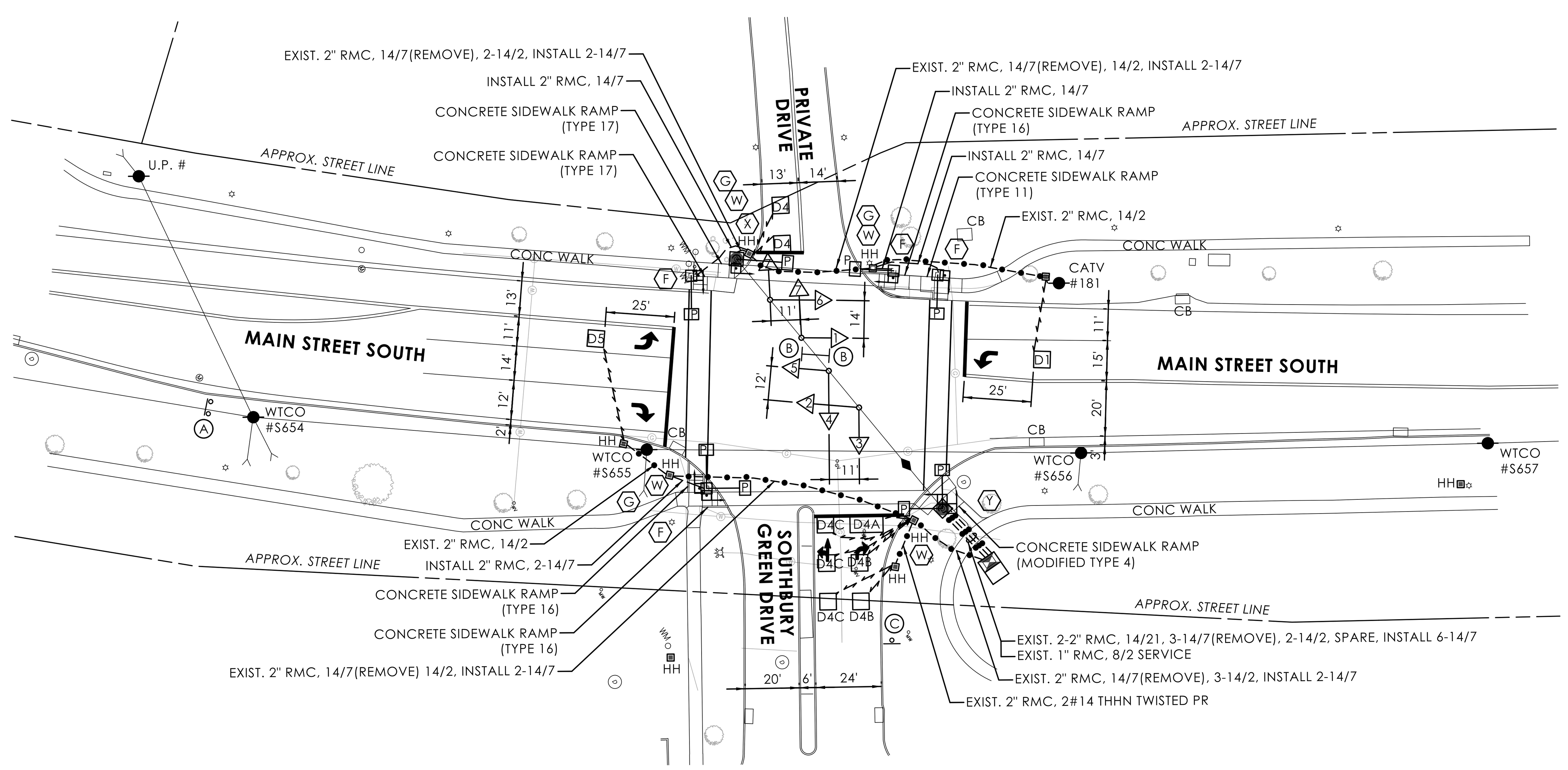

SPAN POLE ELECTRICAL CALLOUTS

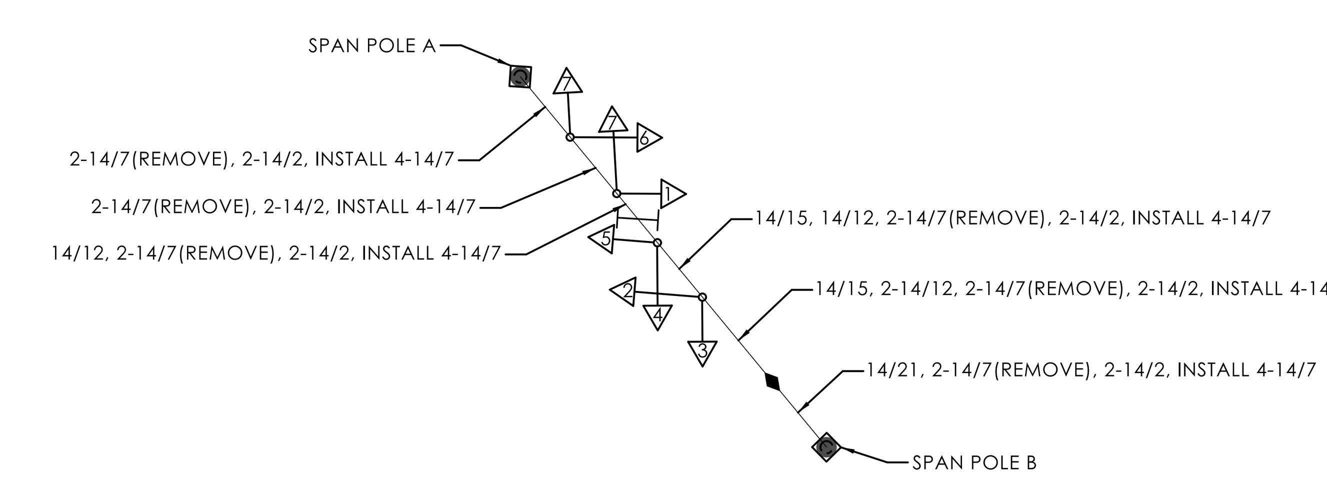

SPAN POLE INFORMATION

ID #	POLE LENGTH	BOLT CIRCLE	LOAD AT YIELD	YEAR INSTALLED
A	30'	20"	7800 LBS	1998
B	30'	20"	7800 LBS	1998

NOTES

TOWN OF SOUTHBURY TO MAINTAIN SIGNS AND PAVEMENT MARKINGS ON MAIN STREET SOUTH.

OTHERS TO MAINTAIN SIGNS PAVEMENT MARKINGS ON PRIVATE PROPERTY.

ALL CROSSWALKS ARE BAR TYPE.

(W) 30" X 30" HANDHOLE. ALL OTHERS TYPE II.

FINAL DESIGN

TOWN SIGNAL

	TRAFFIC	DATE	ELECTRICAL	DATE
ENGINEER	SLR			
DRAWN BY				
CHECKED BY				
SUBMITTED BY				
APPROVED BY				
APPROVED DATE				

REV #	INTERSECTION # **N/A**
ENERGY BY - DEVELOPER	ADDRESS #
MAINT LEVEL	SERVICE POLE - WTCO 656
	UNMETERED SERVICE

SCALE: 1" = 40'

REV. | DATE | REVISION DESCRIPTION

LEGEND: FL. FLASHING; R RED; Y YELLOW; G GREEN; ◄R RED ARROW; ◄Y YELLOW ARROW; ◄ GREEN ARROW; WØ WALK/ PED. CLR; D.W. DON'T WALK; DET. LEADS IN SAW CUT; PROPOSED RMC; EXISTING RMC; CABLE CLOSURE; VC VIDEO CAMERA CABLE; RC RADAR CABLE; PROPOSED SUPPORT STRUCTURE; EXISTING STEEL SPAN POLE; PROPOSED UTILITY POLE; EXISTING UTILITY POLE; EXISTING WOOD SPAN POLE; PEDESTAL MOUNTING; PEDESTAL MOUNTED RRFB; PEDESTRIAN PUSH BUTTON & SIGN; DIRECTIONAL ARW. FOR PUSH BUTTON; PEDESTRIAN SIGNAL FACE; TRAFFIC SIGNAL FACE; PROPOSED HANDHOLE; EXISTING HANDHOLE; PROPOSED CONTROLLER; EXISTING CONTROLLER; AUXILIARY EQUIPMENT CABINET; OPTICAL DETECTOR; IP VIDEO DETECTOR; RADAR DETECTOR; THERMAL DETECTOR; AUDIO DETECTOR; 360° CAMERA ASSEMBLY; VIDEO THERMAL DETECTOR; DETECTION ZONE; LOOP DETECTOR; RADIO ANTENNA; POLE ANCHOR

CONNECTICUT DEPARTMENT OF TRANSPORTATION

MAIN STREET SOUTH AT SOUTHBURY GREEN DRIVE

TOWN(S): **SOUTHBURY, CONNECTICUT**

DRAWING TITLE: **TRAFFIC CONTROL SIGNAL PLAN**

PROJECT NO.: **0130-0194**

DRAWING NO.: **TCS-02**

SHEET NO.: **09**

LASTED SAVED BY: awetmore **FILE NAME:** W:\CADDesign\12097.00034-DE\CAD\TCS-02.dgn

PLOTTED DATE: 7/8/2025

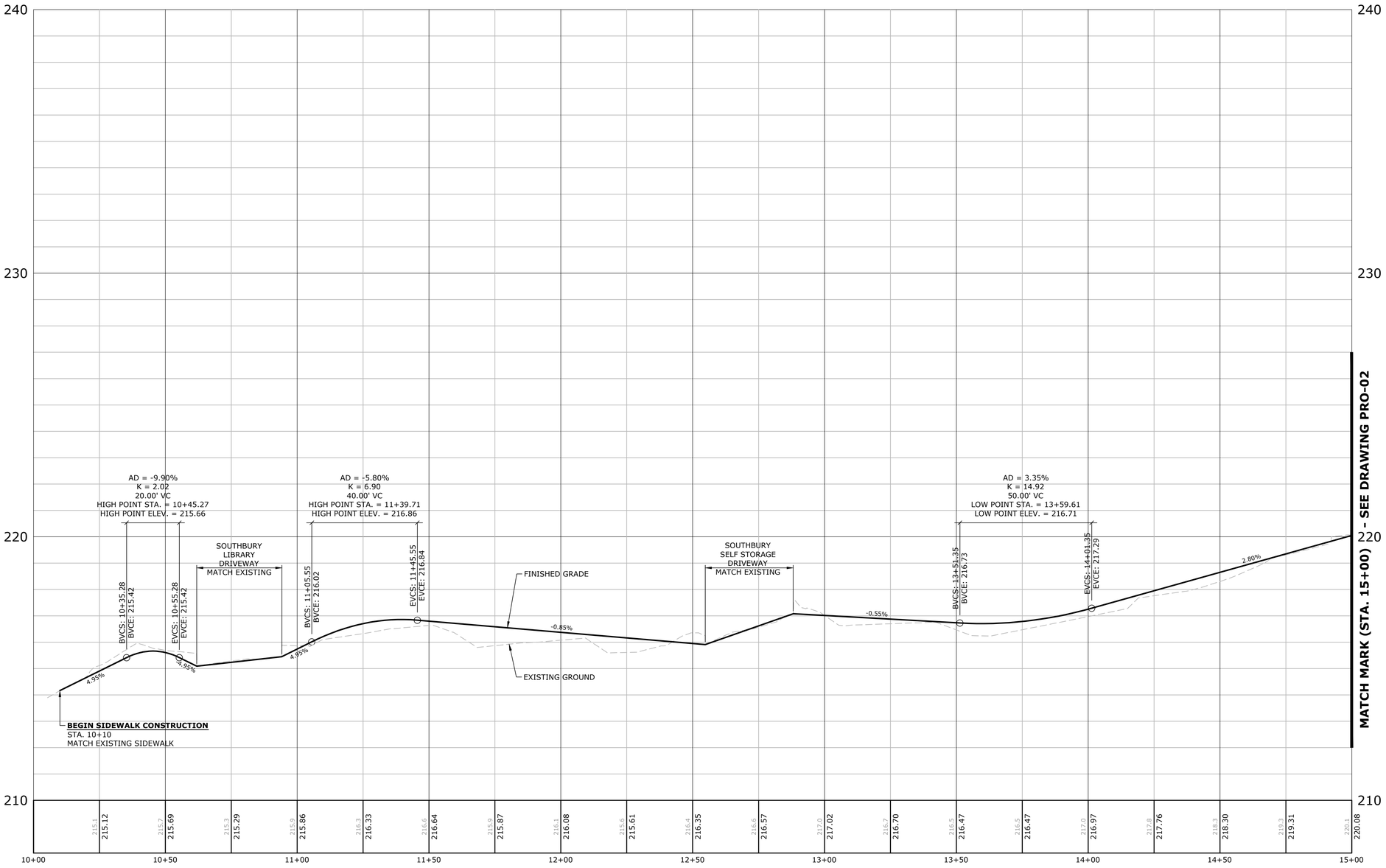

POVERTY ROAD SIDEWALK PROFILE
STA. 10+00 TO STA. 15+00
H: 1" = 20'
V: 1" = 2'

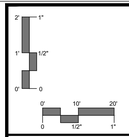

SLR
99 REALTY DRIVE
CHESHIRE, CT 06410
203.271.1773
SLRCONSULTING.COM

DESCRIPTION	DATE	BY

SIDEWALK PROFILE

PEDESTRIAN SAFETY IMPROVEMENTS

MAIN STREET SOUTH AND POVERTY ROAD
SOUTHBURY, CONNECTICUT

MSM	ABW	MSM
DESIGNED	DRAWN	CHECKED

SCALE: 1"=20' H, 1"=2' V

DATE: JULY 31, 2025

PROJECT NO.: 0130-0194

DRAWING NO.: PRO-01

SHEET NO.: 10

Plotted by: MARKSON, WILLIAM B. on Thu, 2025 Jul 31 - 11:14am
Filename: M:\0130\0130-0194 Poverty Rd Sidewalk\Drawings\Plan Sets\PRO-01

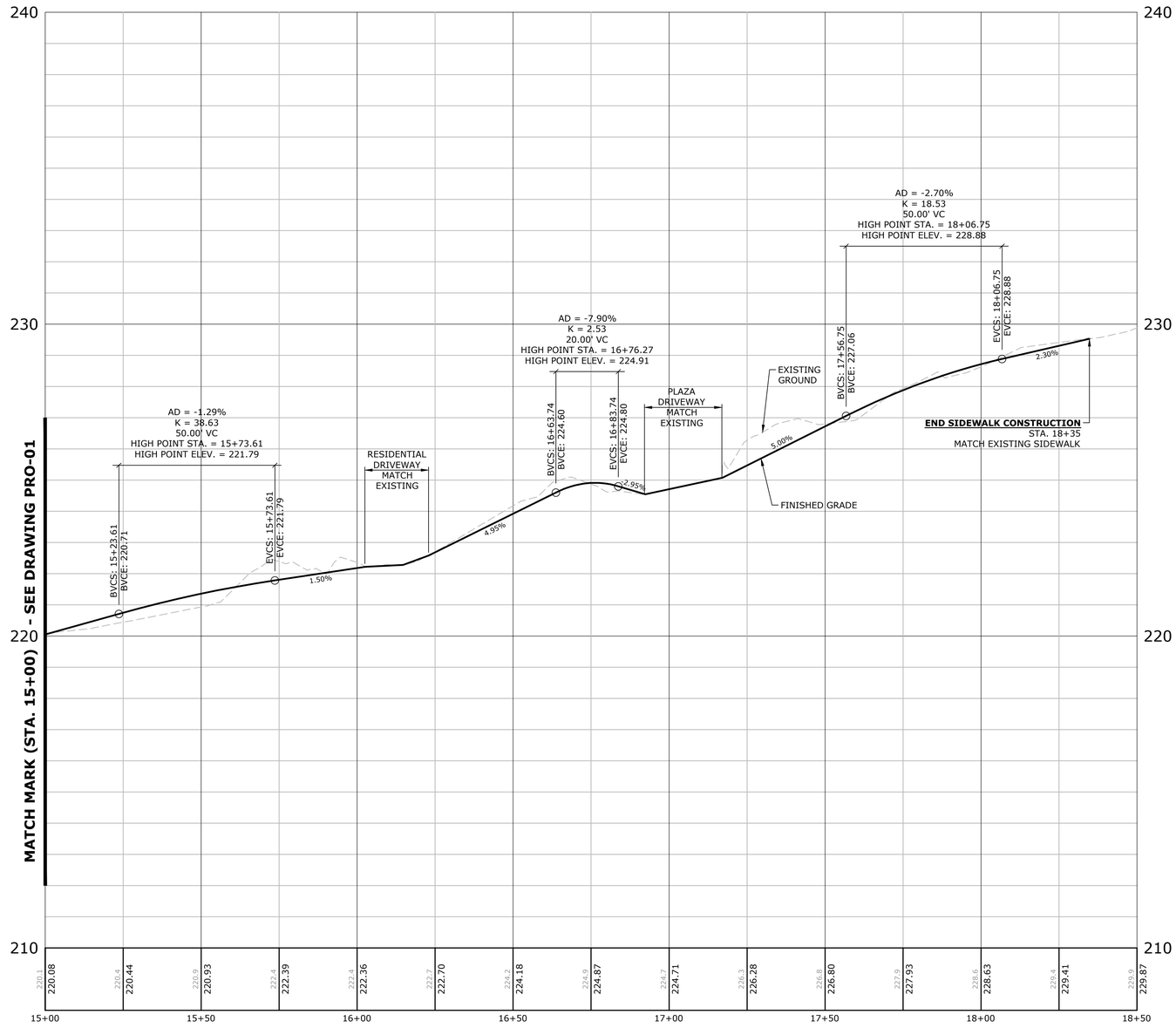

POVERTY ROAD SIDEWALK PROFILE
STA. 15+00 TO STA. 18+50
H: 1" = 20'
V: 1" = 2'

SLR
99 REALTY DRIVE
CHESHIRE, CT 06410
203.271.1773
SLRCONSULTING.COM

DESCRIPTION	DATE	BY

SIDEWALK PROFILE

PEDESTRIAN SAFETY IMPROVEMENTS

MAIN STREET SOUTH AND POVERTY ROAD
SOUTHBURY, CONNECTICUT

MSM	ABW	MSM
DESIGNED	DRAWN	CHECKED

SCALE: 1"=20' H, 1"=2' V

DATE: JULY 31, 2025

PROJECT NO.: 0130-0194

DRAWING NO.: PRO-02

SHEET NO.: 11

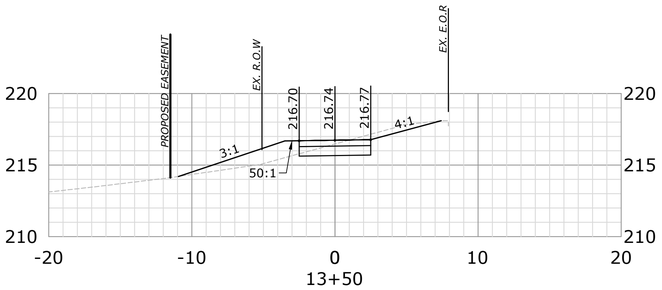

13+50

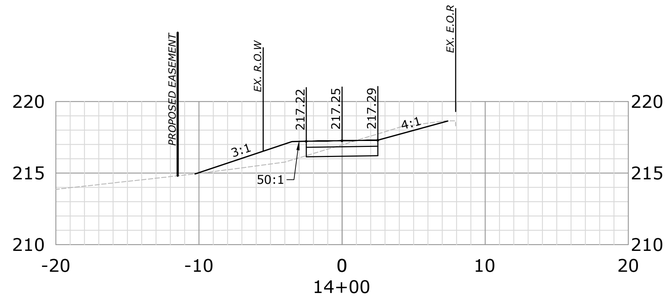

14+00

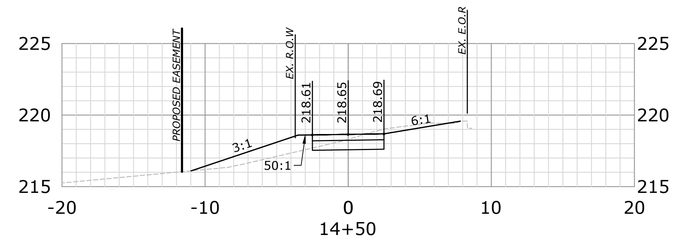

14+50

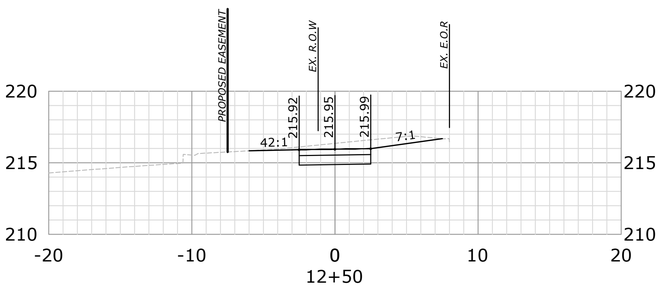

12+50

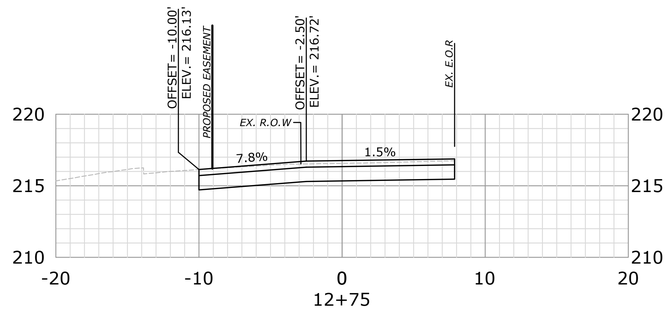

12+75

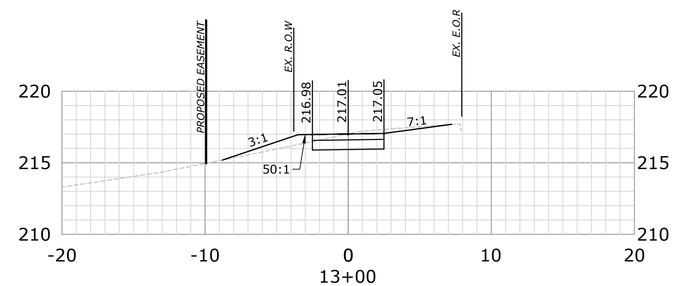

13+00

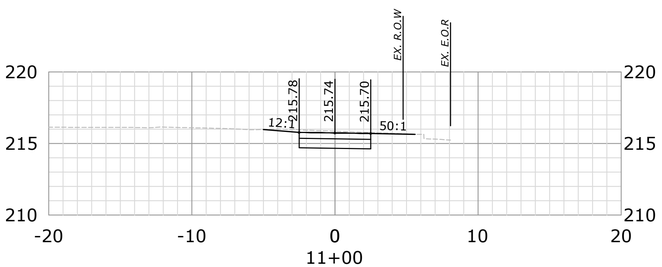

11+00

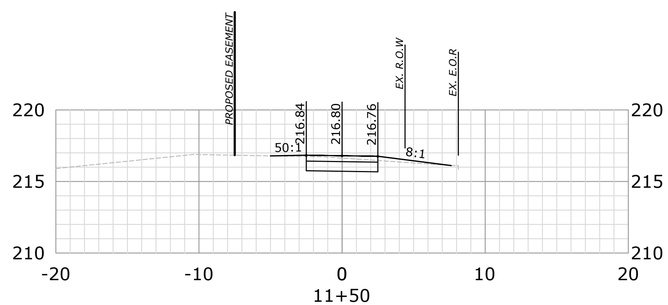

11+50

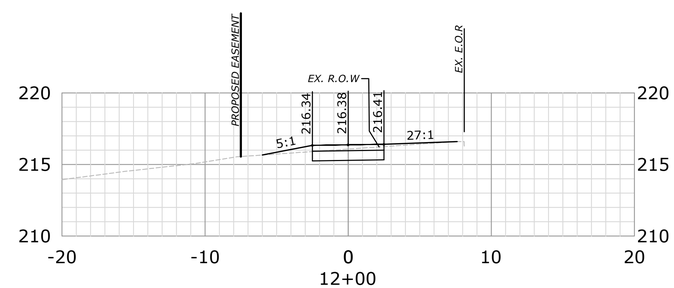

12+00

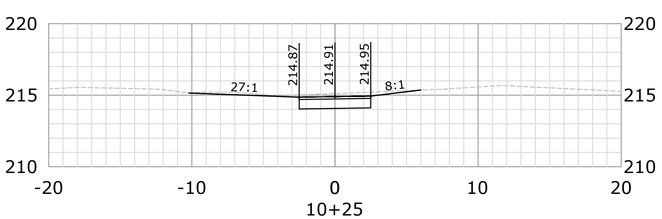

10+25

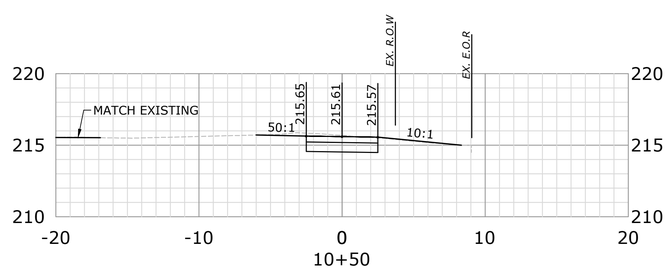

10+50

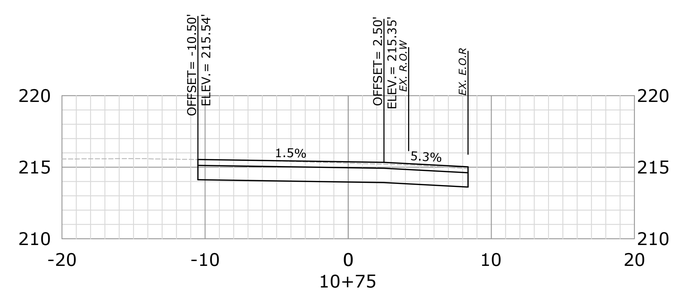

10+75

0' 2.5' 5'
0 1/2" 1"

SLR

99 REALTY DRIVE
CHESHIRE, CT 06410
203.271.1773
SLRCONSULTING.COM

DESCRIPTION	DATE	BY

CROSS SECTIONS

PEDESTRIAN SAFETY IMPROVEMENTS

MAIN STREET SOUTH AND POVERTY ROAD
SOUTHBURY, CONNECTICUT

MSM	ABW	MSM
DESIGNED	DRAWN	CHECKED

SCALE: 1"=5'

DATE: JULY 31, 2025

PROJECT NO.: 0130-0194

DRAWING NO.: XSC-01

SHEET NO.: 12

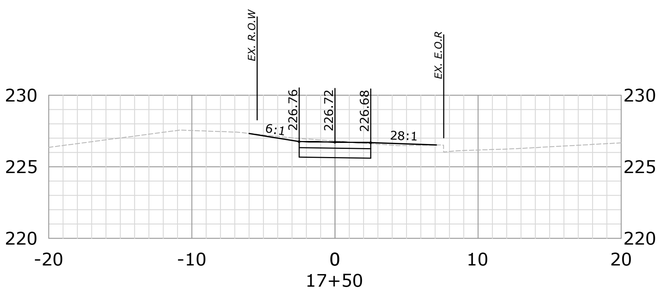

17+50

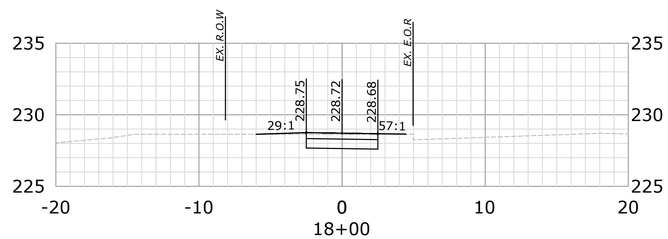

18+00

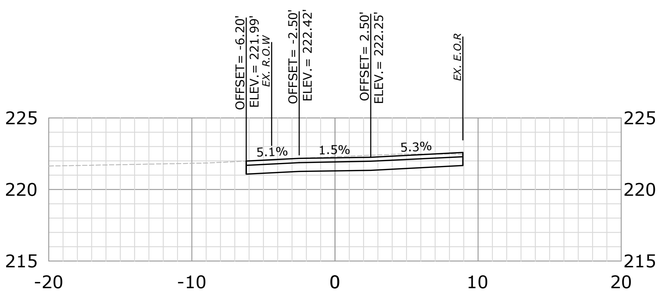

16+10

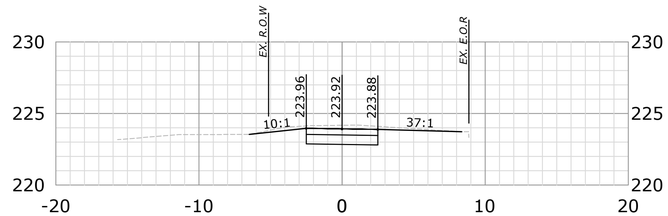

16+50

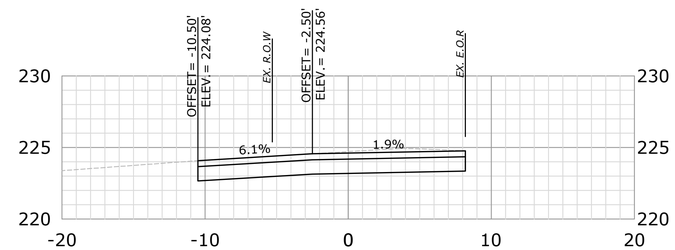

17+00

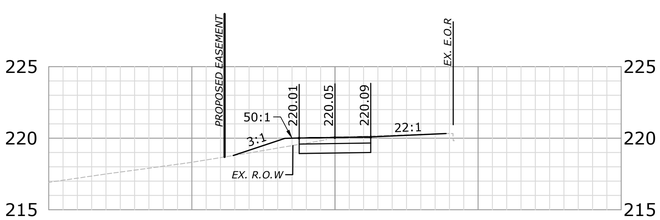

15+00

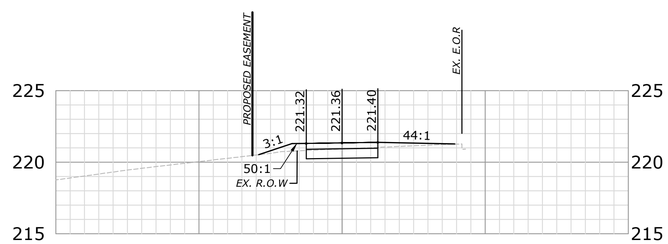

15+50

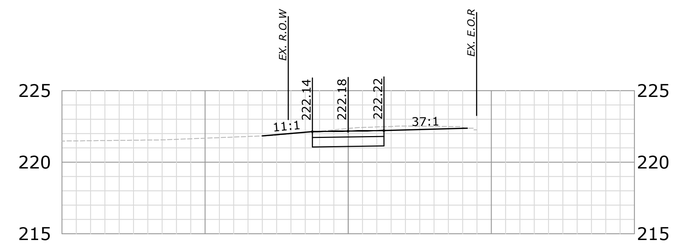

16+00

0' 2.5' 5'
0 1/2" 1"

SLR
99 REALTY DRIVE
CHESHIRE, CT 06410
203.271.1773
SLRCONSULTING.COM

DESCRIPTION	DATE	BY

CROSS SECTIONS

PEDESTRIAN SAFETY IMPROVEMENTS

MAIN STREET SOUTH AND POVERTY ROAD
SOUTHBURY, CONNECTICUT

MSM	ABW	MSM
DESIGNED	DRAWN	CHECKED

SCALE: 1"=5'

DATE: JULY 31, 2025

PROJECT NO.: 0130-0194

DRAWING NO.: XSC-02

SHEET NO.: 13

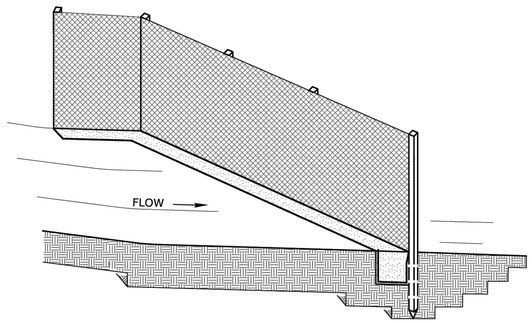

INSTALL THE WING WHEN THE FENCE IS MORE THAN 4' FROM THE TOE OF SLOPE AND THE FENCE LINE GRADIENT IS 5% OR MORE

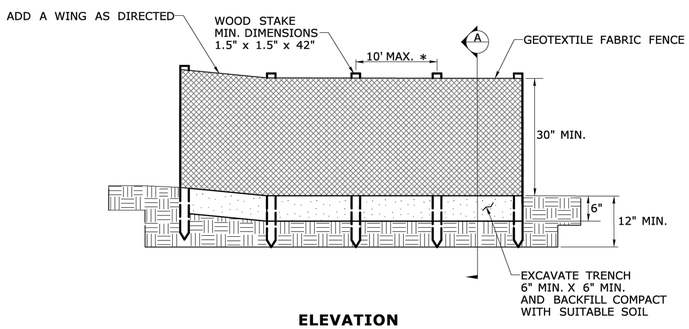

ELEVATION

* FOR SLOPES STEEPER THAN 2:1 USE A 5' POST SPACING OR AS DIRECTED BY THE ENGINEER

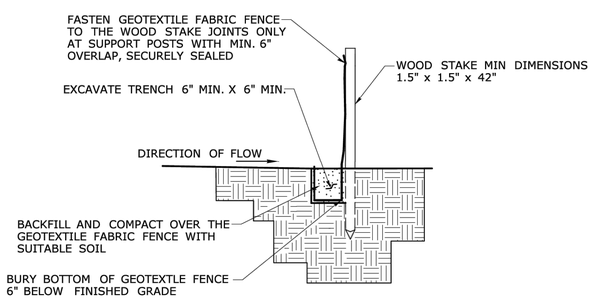

SECTION A

SEDIMENTATION CONTROL SYSTEM

NOT TO SCALE

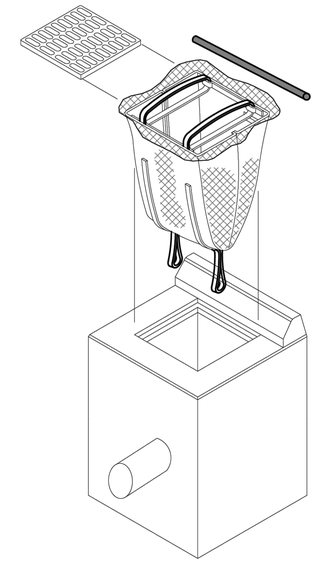

NOTE: THIS ITEM WILL BE MEASURED BY EACH SEDIMENT CONTROL SYSTEM AT CATCH BASIN

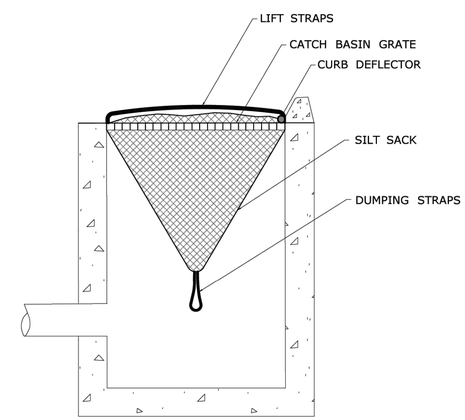

SECTION

SEDIMENT CONTROL SYSTEM AT CATCH BASIN

NOT TO SCALE

SLR
99 REALTY DRIVE
CHESHIRE, CT 06410
203.271.1773
SLRCONSULTING.COM

DESCRIPTION	DATE	BY

MISCELLANEOUS DETAILS

PEDESTRIAN SAFETY IMPROVEMENTS

MAIN STREET SOUTH AND POVERTY ROAD
SOUTHBURY, CONNECTICUT

MSM	ABW	MSM
DESIGNED	DRAWN	CHECKED

SCALE: NOT TO SCALE

DATE: JULY 31, 2025

PROJECT NO.: 0130-0194

DRAWING NO.: MDS-01

SHEET NO.: 14

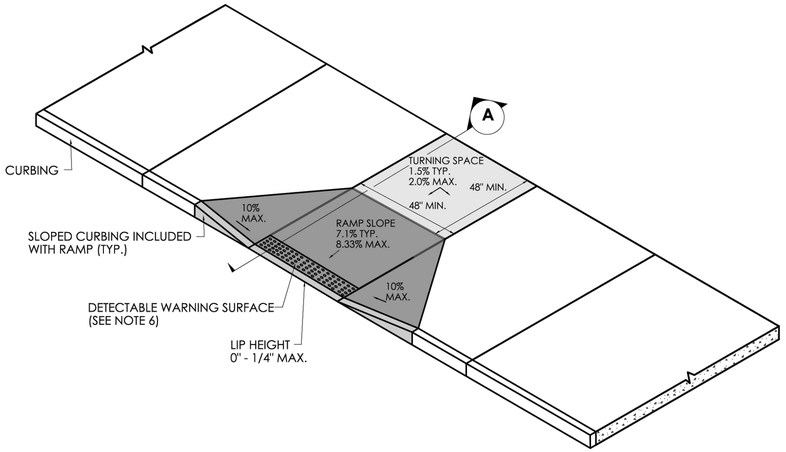

PERPENDICULAR SIDEWALK RAMP AND SECTION

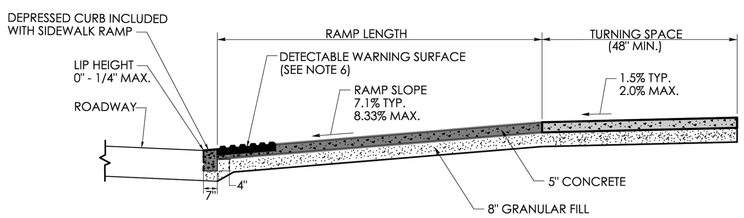

SECTION A

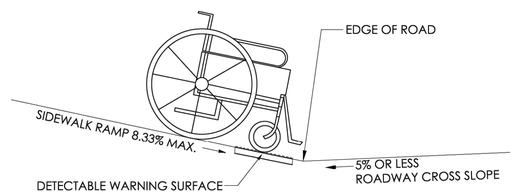

SIDEWALK RAMP GRADE AT ROADWAY CROSS SLOPE OF 5% OR LESS GUTTER COUNTER SLOPE

GENERAL NOTES:

1. SIDEWALK RAMPS SHALL HAVE A COARSE BROOM FINISH TRANSVERSE TO THE SLOPE OF THE RAMP.
2. VERTICAL SURFACE DISCONTINUITIES AT JOINTS SHALL NOT EXCEED ¼" INCH.
3. REMOVAL OF EXISTING SIDEWALK FOR NEW RAMP INSTALLATIONS SHALL BE TO THE NEAREST EXPANSION OR CONTRACTION JOINT.
4. THE RUNNING SLOPE OF THE CURB RAMP SHALL BE 8.33 PERCENT MAXIMUM BUT SHALL NOT REQUIRE THE RAMP LENGTH TO EXCEED 15 FEET.
5. DETECTABLE WARNING SURFACES SHALL BE INSTALLED ON SIDEWALK RAMPS AT PEDESTRIAN STREET CROSSINGS, PEDESTRIAN REFUGE ISLANDS AND RAILROAD CROSSINGS ALONG STREETS OR HIGHWAYS.
6. DETECTABLE WARNING SURFACES SHALL EXTEND 2 FEET MIN. IN THE DIRECTION OF PEDESTRIAN TRAVEL AND SPAN THE ENTIRE RAMP OPENING.
7. ALL GUIDESHEET VALUES COMPLY WITH PROWAG DRAFT 2013 GUIDELINES. UPDATED VALUES WILL BE MADE TO COMPLY WITH PROWAG FINAL RULE ONCE OFFICIALLY THE LAW.
8. CTDOT DESIGN STANDARD USE THE PUBLIC RIGHT-OF-WAY ACCESSIBILITY GUIDELINES (PROWAG) SEE ENGINEERING DIRECTIVE ED-2019-7.
9. CURB RAMPS SHALL BE CONSTRUCTED SO THAT WATER WILL NOT ACCUMLATE WITHIN THE PEDESTRIAN ACCESS ROUTE.

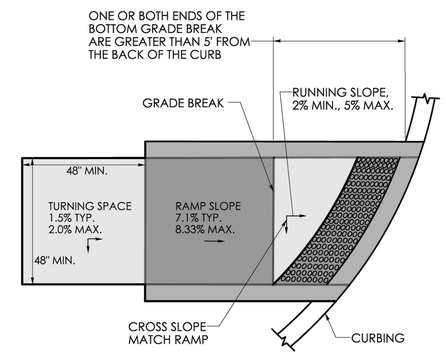

GRADE BREAK GREATER THAN 5' DETECTABLE WARNING SURFACE LOCATION

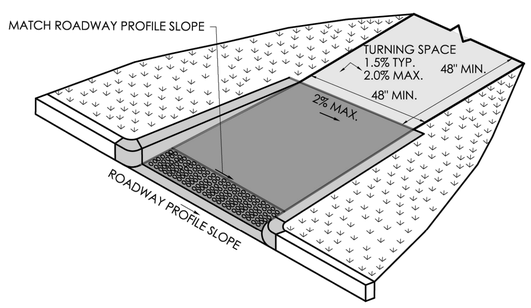

RAMP WARPING DETAIL

1. TRANSITION SIDEWALK RAMP TO MATCH ROADWAY PROFILE AS GRADUALLY AS POSSIBLE. DO NOT EXCEED 3 % PER FOOT CROSS SLOPE RATE OF CHANGE WHEN TRANSITIONING TO ROADWAY PROFILE.
2. COMPLETE TRANSITION TO THE ROADWAY PROFILE BEHIND THE DETECTABLE WARNING SURFACE.

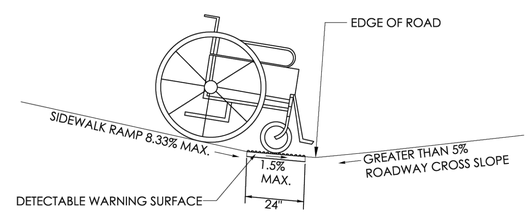

SIDEWALK RAMP GRADE AT ROADWAY CROSS SLOPE OF GREATER THAN 5% GUTTER COUNTER SLOPE

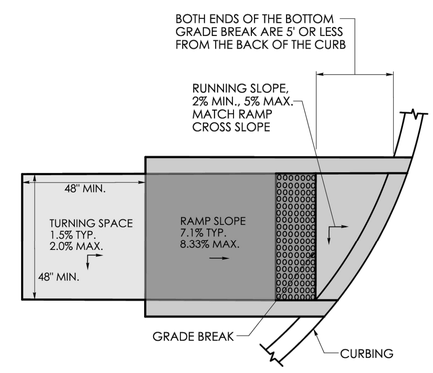

GRADE BREAK OF 5' OR LESS DETECTABLE WARNING SURFACE LOCATION

SLR
99 REALTY DRIVE
CHESHIRE, CT 06410
203.271.1773
SLRCONSULTING.COM

DESCRIPTION	DATE	BY

MISCELLANEOUS DETAILS

PEDESTRIAN SAFETY IMPROVEMENTS

MAIN STREET SOUTH AND POVERTY ROAD
SOUTHBURY, CONNECTICUT

MSM	ABW	MSM
DESIGNED	DRAWN	CHECKED

SCALE: NOT TO SCALE

DATE: JULY 31, 2025

PROJECT NO.: 0130-0194

DRAWING NO.: MDS-02

SHEET NO.: 15

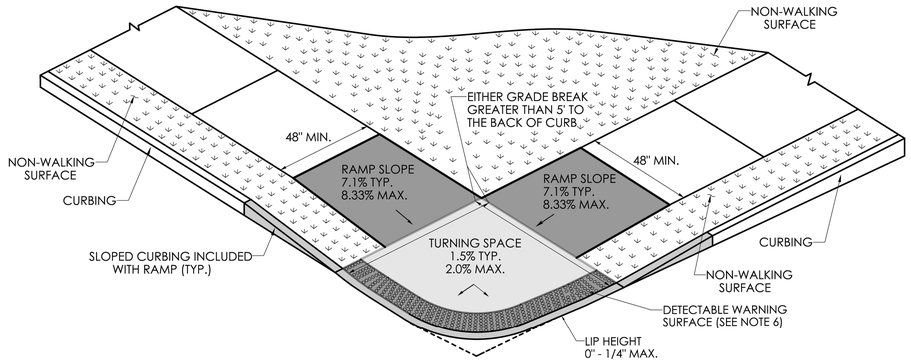

TWO DIRECTIONAL PERPENDICULAR RAMP WITH A GRADE BREAK TO BACK OF CURB GREATER THAN 5' WITH NON-WALKING SURFACE (TYPE 4)

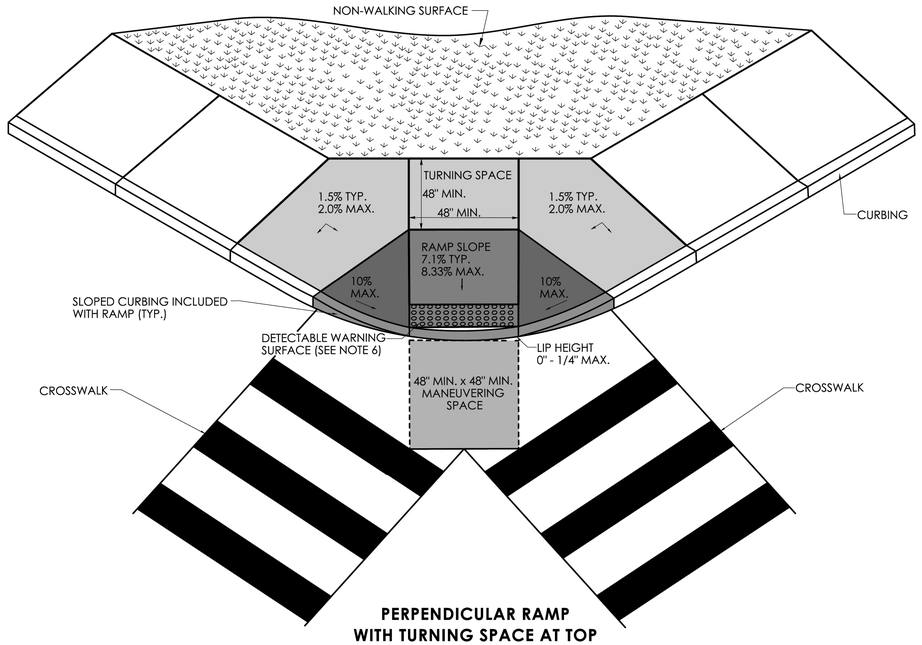

PERPENDICULAR RAMP WITH TURNING SPACE AT TOP (TYPE 7)

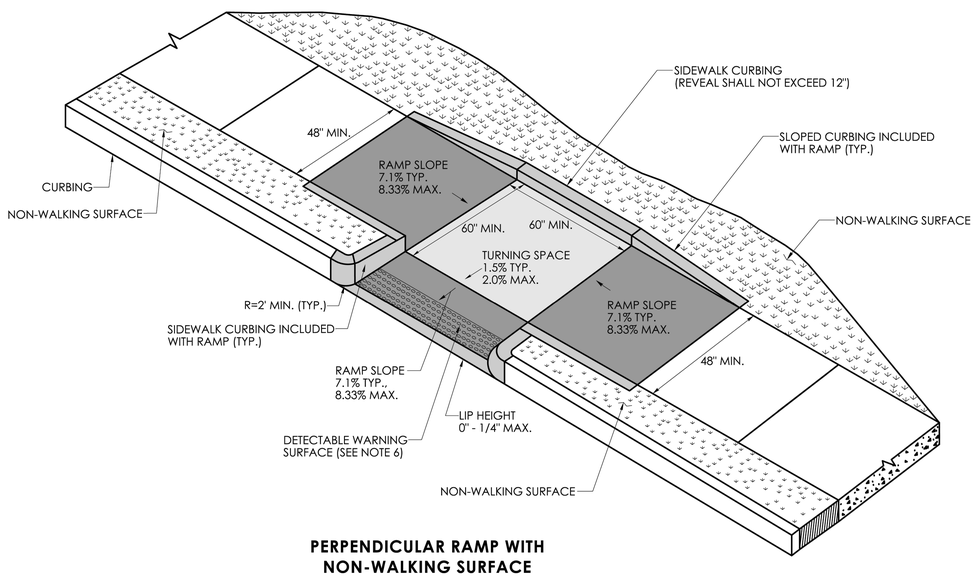

PERPENDICULAR RAMP WITH NON-WALKING SURFACE (TYPE 11)

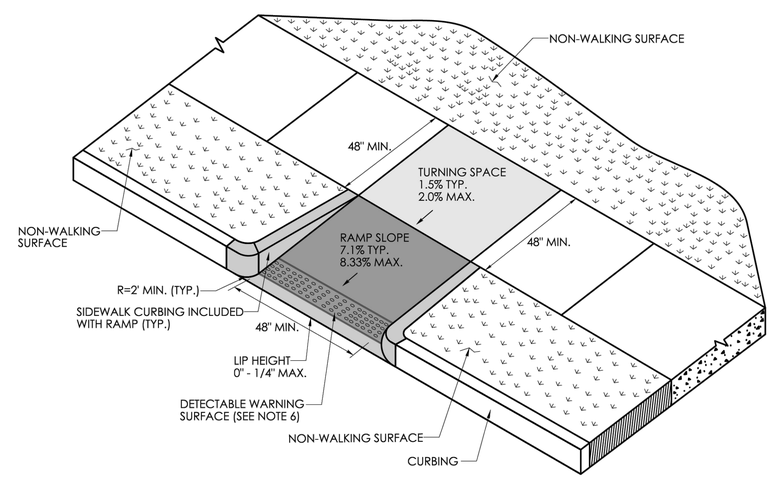

PERPENDICULAR RAMP WITH NON-WALKING SURFACE (TYPE 13)

SLR
99 REALTY DRIVE
CHESHIRE, CT 06410
203.271.1773
SLRCONSULTING.COM

DESCRIPTION	DATE	BY

MISCELLANEOUS DETAILS

PEDESTRIAN SAFETY IMPROVEMENTS

MAIN STREET SOUTH AND POVERTY ROAD
SOUTHBURY, CONNECTICUT

MSM	ABW	MSM
DESIGNED	DRAWN	CHECKED

SCALE: NOT TO SCALE

DATE: JULY 31, 2025

PROJECT NO.: 0130-0194

DRAWING NO.: MDS-03

SHEET NO.: 16

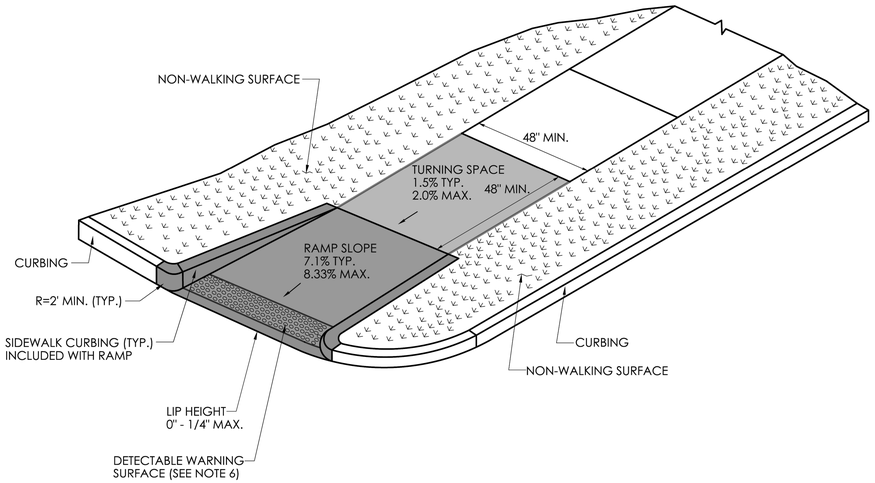

SINGLE DIRECTION PERPENDICULAR RAMP
RETURN CURB WITH NON-WALKING SURFACE
(TYPE 16)

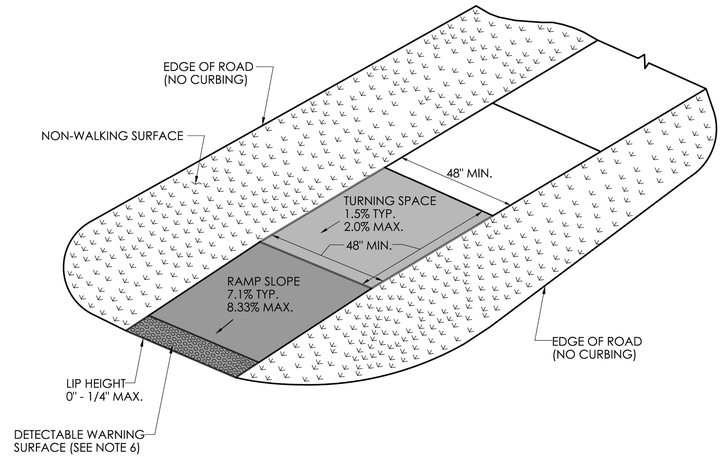

SINGLE DIRECTION PERPENDICULAR RAMP
NO CURB WITH NON-WALKING SURFACE
(TYPE 17)

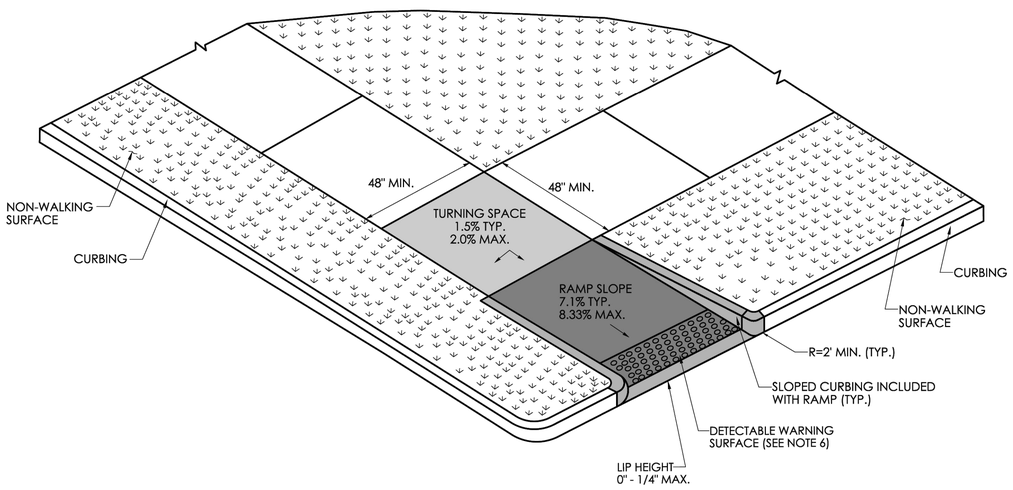

RESTRICTED PEDESTRIAN CROSSING SIDEWALK RAMP
WITH NON-WALKING SURFACE
(TYPE 20)

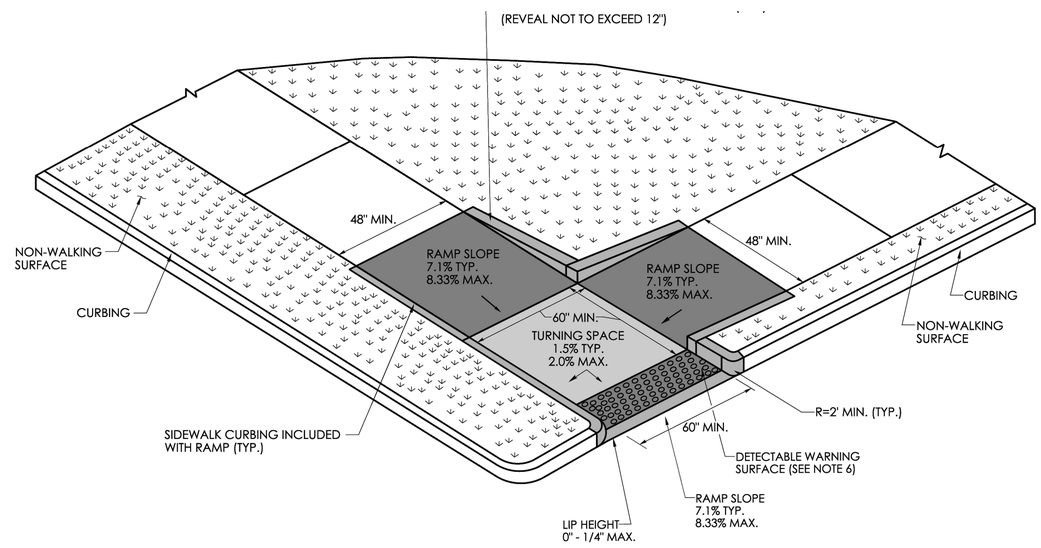

RESTRICTED PEDESTRIAN CROSSING
WITH LANDING AT BOTTOM AND NON-WALKING SURFACE
(TYPE 21)

SLR
99 REALTY DRIVE
CHESHIRE, CT 06410
203.271.1773
SLRCONSULTING.COM

DESCRIPTION	DATE	BY

MISCELLANEOUS DETAILS

PEDESTRIAN SAFETY IMPROVEMENTS

MAIN STREET SOUTH AND POVERTY ROAD
SOUTHBURY, CONNECTICUT

MSM	ABW	MSM
DESIGNED	DRAWN	CHECKED

SCALE: NOT TO SCALE

DATE: JULY 31, 2025

PROJECT NO.: 0130-0194

DRAWING NO.: MDS-04

SHEET NO.: 17

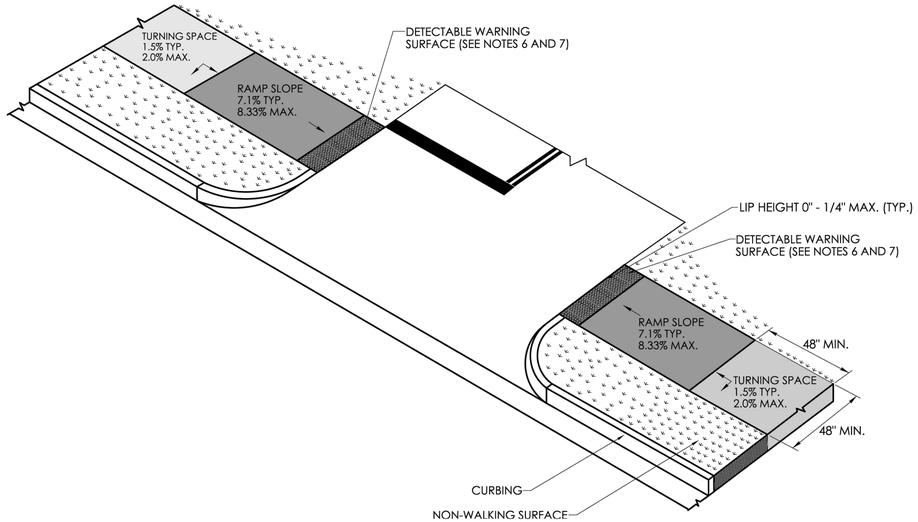

DRIVEWAY CROSSING SIGNALIZED, STOP CONTROLLED OR YIELD WITH DETECTABLE WARNING SURFACE AND NON WALKING SURFACE

(TYPE 29)

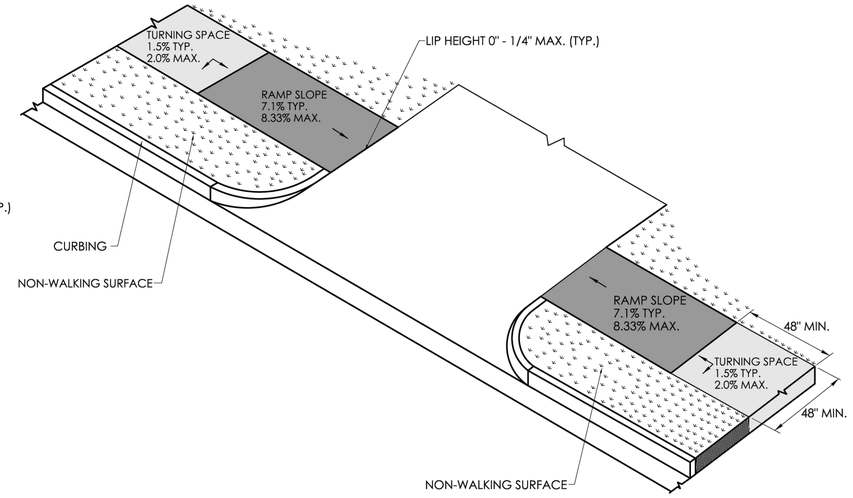

UNSIGNALIZED, NO STOP CONTROL OR YIELD DRIVEWAY CROSSING WITH NON WALKING SURFACE

(TYPE 30)

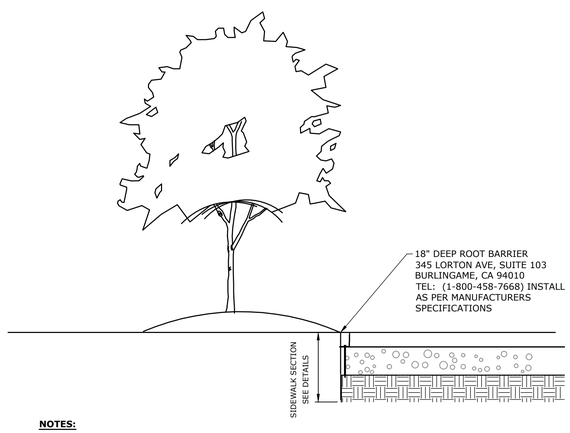

NOTES:

1. INSTALL BARRIER FOR A LENGTH EQUAL TO A DISTANCE OF 2' WIDER THAN THE DRIP LINE OF THE TREE.

ROOT PRUNING/ROOT BARRIER

NOT TO SCALE

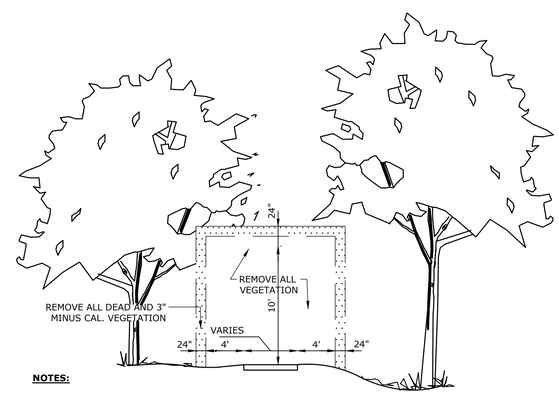

NOTES:

1. CLEARING SHALL NOT OCCUR BETWEEN APRIL 15 AND OCTOBER 31.

CLEARING LIMITS

NOT TO SCALE

SLR
99 REALTY DRIVE
CHESHIRE, CT 06410
203.271.1773
SLRCONSULTING.COM

DESCRIPTION	DATE	BY

MISCELLANEOUS DETAILS

PEDESTRIAN SAFETY IMPROVEMENTS

MAIN STREET SOUTH AND POVERTY ROAD
SOUTHBURY, CONNECTICUT

MSM	ABW	MSM
DESIGNED	DRAWN	CHECKED

SCALE: NOT TO SCALE

DATE: JULY 31, 2025

PROJECT NO.: 0130-0194

DRAWING NO.: MDS-05

SHEET NO.: 18

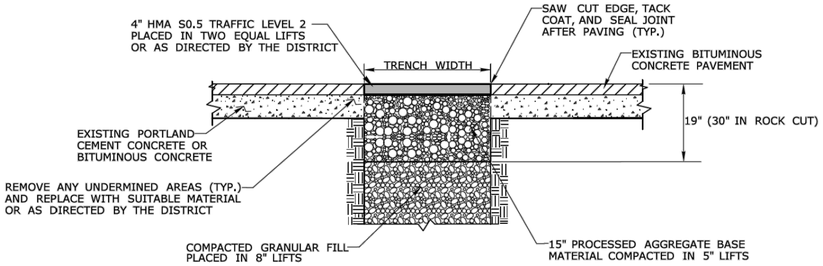

TEMPORARY PAVEMENT REPAIR FOR TRENCH THROUGH OVERLAID PORTLAND CEMENT CONCRETE OR BITUMINOUS CONCRETE PAVEMENT

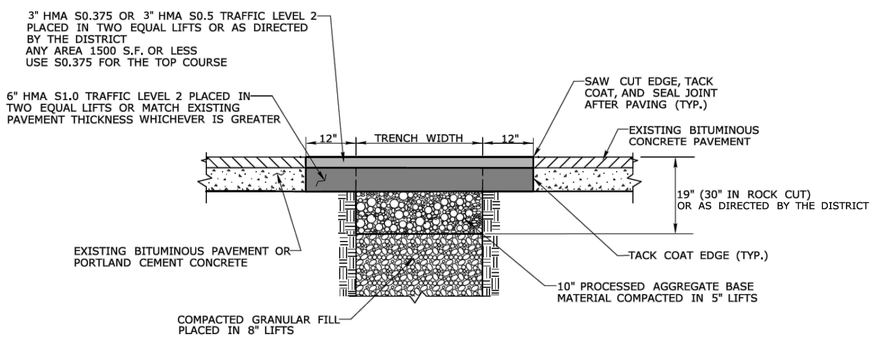

PERMANENT PAVEMENT REPAIR WITHOUT MILLING - THROUGH PORTLAND CEMENT CONCRETE OR BITUMINOUS CONCRETE PAVEMENT

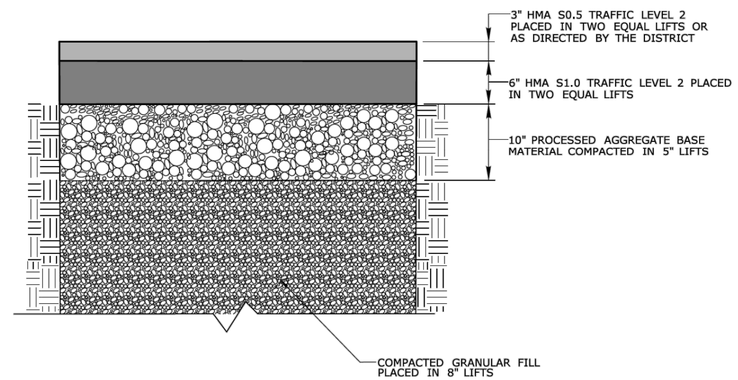

ROADWAY PROFILE

GENERAL NOTES:

1. LONGITUDINAL TRENCHING FOR JOINTED CONCRETE PAVEMENT:

   A. IF THE LONGITUDINAL TRENCH FALLS BETWEEN THE SLAB CENTERLINE AND THE EDGE OF SLAB, REMOVE CONCRETE AND BITUMINOUS CONCRETE PAVEMENT FROM THE TRENCH EDGE TO THE EDGE OF ROAD. IF THE LONGITUDINAL TRENCH FALLS BETWEEN THE LONGITUDINAL JOINT AND THE SLAB CENTERLINE, REMOVE THE ENTIRE CONCRETE SLAB AND BITUMINOUS CONCRETE PAVEMENT TO THE EDGE OF ROAD. IN EITHER CASE REBUILD WITH THE FOLLOWING:

      a. PLACE HMA S1.0 TRAFFIC LEVEL 2 IN TWO EQUAL 4" - 5" LIFTS TO MATCH EXISTING CONCRETE PAVEMENT THICKNESS
      b. PLACE HMA S0.5 TRAFFIC LEVEL 2 IN 2" - 3" LIFTS TO MATCH EXISTING BITUMINOUS CONCRETE PAVEMENT THICKNESS, WITH THE FINAL LIFT BEING 2"

2. TRANSVERSE TRENCHING FOR JOINTED CONCRETE PAVEMENT:

TABLE 1	
TOTAL SLAB LENGTH (L)	MIN. LENGTH REMAINING
40' OR LONGER	1/4 L
15' - 40'	10'
15' OR SHORTER	REBUILD TO NEAREST JOINT

   A. FOR TRANSVERSE TRENCHES, THE MINIMUM SLAB LENGTH AS SHOWN IN TABLE 1 SHALL BE LEFT IN PLACE TO THE NEAREST TRANSVERSE JOINT. IF THIS CRITERIA CANNOT BE MET, THE EXISTING SLAB AREA FROM THE TRENCH EDGE TO THE NEAREST TRANSVERSE JOINT SHALL BE REMOVED AND REBUILT AS FOLLOWS:

      a. PLACE HMA S1.0 TRAFFIC LEVEL 2 IN TWO EQUAL 4" - 5" LIFTS TO MATCH EXISTING CONCRETE PAVEMENT THICKNESS
      b. PLACE HMA S0.5 TRAFFIC LEVEL 2 IN 2" - 3" LIFTS TO MATCH EXISTING BITUMINOUS CONCRETE PAVEMENT THICKNESS, WITH THE FINAL LIFT BEING 2"

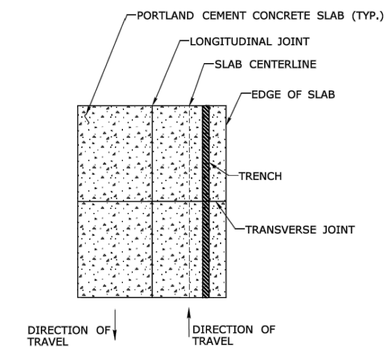

LONGITUDINAL TRENCHING FOR JOINTED CONCRETE PAVEMENT
(SEE NOTE 1)

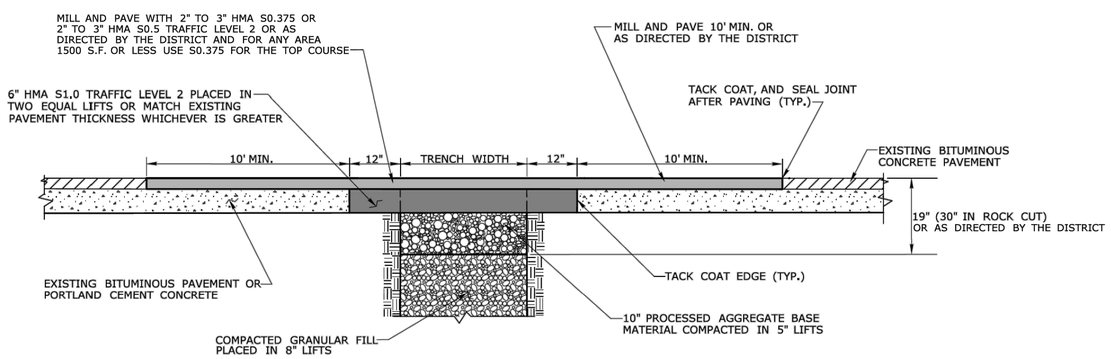

PERMANENT PAVEMENT REPAIR WITH MILLING

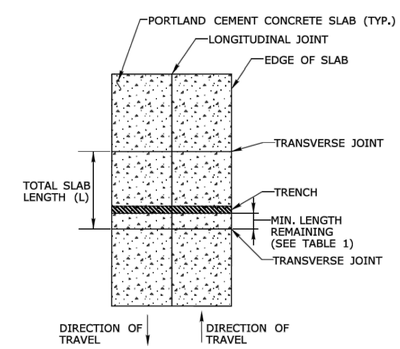

TRANSVERSE TRENCHING FOR JOINTED CONCRETE PAVEMENT
(SEE NOTE 2)

PAVEMENT REPAIR

NOT TO SCALE

SLR
99 REALTY DRIVE
CHESHIRE, CT 06410
203.271.1773
SLRCONSULTING.COM

DESCRIPTION	DATE	BY

MISCELLANEOUS DETAILS

PEDESTRIAN SAFETY IMPROVEMENTS

MAIN STREET SOUTH AND POVERTY ROAD
SOUTHBURY, CONNECTICUT

MSM	ABW	MSM
DESIGNED	DRAWN	CHECKED

SCALE: NOT TO SCALE

DATE: JULY 31, 2025

PROJECT NO.: 0130-0194

DRAWING NO.: MDS-06

SHEET NO.: 19

R1 - SERIES

R1-1 *

STOP

LEGEND - WHITE
BACKGROUND - RED

AREA (SQ. FT)	SIZE (INCHES)	CONN. D.O.T. #	POSTS	ALUM. THK.
1.85	18	31-0532	1	.080
5.19	30	31-0552	1	.080
7.98	36	31-0553	1	.080
13.3	48	31-0557	2	.100

R1-2 *

YIELD

LEGEND - RED
BACKGROUND -WHITE

AREA (SQ. FT)	SIZE (INCHES)	CONN. D.O.T. #	POSTS	ALUM. THK.
0.97	18	31-0520	1	.080
3.90	36	31-0523	1	.080
6.77	48	31-0522	2	.100
10.83	60	31-0528	2	.100

R1-3P *

ALL-WAY

LEGEND - WHITE
BACKGROUND - RED

AREA (SQ. FT)	SIZE (INCHES)	CONN. D.O.T. #	POSTS	ALUM. THK.
0.75	18X6	31-0508		.080

R2 - SERIES

R2-1

SPEED LIMIT 00

AREA (SQ. FT)	SIZE (INCHES)	CONN. D.O.T. #	POSTS	ALUM. THK.
5.00	24X30	31-5505	1	.080
7.50	30X36	31-5504	1	.080
12.00	36X48	31-5506	2	.100
20.00	48X60	31-5507	2	.100

R2-4a

SPEED LIMIT 00 MINIMUM 00

AREA (SQ. FT)	SIZE (INCHES)	CONN. D.O.T. #	POSTS	ALUM. THK.
32	48X96	31-5510	2	.125

R3 - SERIES

R3-1

LEGEND - BLACK
BACKGROUND - WHITE
CIRCLE & DIAGONAL - RED

AREA (SQ. FT)	SIZE (INCHES)	CONN. D.O.T. #	POSTS	ALUM. THK.
4.00	24X24	31-1604	1	.080
9.00	36X36	31-1627	2	.080

R3-2

LEGEND - BLACK
BACKGROUND - WHITE
CIRCLE & DIAGONAL - RED

AREA (SQ. FT)	SIZE (INCHES)	CONN. D.O.T. #	POSTS	ALUM. THK.
4.00	24X24	31-1603	1	.080
9.00	36X36	31-1629	2	.080

R3-3

NO TURNS

AREA (SQ. FT)	SIZE (INCHES)	CONN. D.O.T. #	POSTS	ALUM. THK.
4.00	24X24	31-1648	1	.080
9.00	36X36	31-1647	2	.080

R3-4

LEGEND - BLACK
BACKGROUND - WHITE
CIRCLE & DIAGONAL - RED

AREA (SQ. FT)	SIZE (INCHES)	CONN. D.O.T. #	POSTS	ALUM. THK.
4.00	24X24	31-1622	1	.080
9.00	36X36	31-1632	2	.080

R3-5

ONLY ONLY
31-0183 31-0184

AREA (SQ. FT)	SIZE (INCHES)	CONN. D.O.T. #	POSTS	ALUM. THK.
7.50	30X36		1	.080

R3-6

AREA (SQ. FT)	SIZE (INCHES)	CONN. D.O.T. #	POSTS	ALUM. THK.
7.50	30X24	31-0175	1	.080

R3-6

31-0157 31-0158

AREA (SQ. FT)	SIZE (INCHES)	CONN. D.O.T. #	POSTS	ALUM. THK.
7.50	30X36		1	.080

R3-7

LEFT LANE MUST TURN LEFT

AREA (SQ. FT)	SIZE (INCHES)	CONN. D.O.T. #	POSTS	ALUM. THK.
6.25	30X30	31-0117	1	.080
9.00	36X36	31-0120	2	.080

R3-7

RIGHT LANE MUST TURN RIGHT

AREA (SQ. FT)	SIZE (INCHES)	CONN. D.O.T. #	POSTS	ALUM. THK.
6.25	30X30	31-0118	1	.080
9.00	36X36	31-0123	2	.080

R3-8

ONLY ONLY
31-0282 31-0283

AREA (SQ. FT)	SIZE (INCHES)	CONN. D.O.T. #	POSTS	ALUM. THK.
7.50	36X30		2	.080

R3-8

ONLY ONLY

AREA (SQ. FT)	SIZE (INCHES)	CONN. D.O.T. #	POSTS	ALUM. THK.
7.50	36X30	31-0290	1	.080

R3-8

ONLY ONLY
31-0295 31-0219

AREA (SQ. FT)	SIZE (INCHES)	CONN. D.O.T. #	POSTS	ALUM. THK.
7.50	36X30		2	.080

R3-8

ONLY ONLY
31-0222 31-0223

AREA (SQ. FT)	SIZE (INCHES)	CONN. D.O.T. #	POSTS	ALUM. THK.
6.25	30X30		1	.080

R3-8

ONLY

AREA (SQ. FT)	SIZE (INCHES)	CONN. D.O.T. #	POSTS	ALUM. THK.
8.75	42X30	31-0279	2	.100

R3-8

ONLY ONLY
31-0262 31-0261

AREA (SQ. FT)	SIZE (INCHES)	CONN. D.O.T. #	POSTS	ALUM. THK.
6.25	30X30		1	.080

R3-8b

ONLY ONLY

AREA (SQ. FT)	SIZE (INCHES)	CONN. D.O.T. #	POSTS	ALUM. THK.
10.00	48X30	31-0302	2	.100

R3-8b

ONLY ONLY
31-0307 31-0372

AREA (SQ. FT)	SIZE (INCHES)	CONN. D.O.T. #	POSTS	ALUM. THK.
10.00	48X30		2	.100

R3-8b

ONLY ONLY

AREA (SQ. FT)	SIZE (INCHES)	CONN. D.O.T. #	POSTS	ALUM. THK.
8.75	42X30	31-0334	2	.100

R3-8b

ONLY ONLY
31-0370 31-0371

AREA (SQ. FT)	SIZE (INCHES)	CONN. D.O.T. #	POSTS	ALUM. THK.
8.75	42X30		2	.100

R4 - SERIES

R4-1

DO NOT PASS

AREA (SQ. FT)	SIZE (INCHES)	CONN. D.O.T. #	POSTS	ALUM. THK.
5.00	24X30	31-1502	1	.080

R4-16

KEEP RIGHT EXCEPT TO PASS

AREA (SQ. FT)	SIZE (INCHES)	CONN. D.O.T. #	POSTS	ALUM. THK.
20.00	48X60	31-1574	2	.100

R4-3

SLOWER TRAFFIC KEEP RIGHT

AREA (SQ. FT)	SIZE (INCHES)	CONN. D.O.T. #	POSTS	ALUM. THK.
5.00	24X30	31-1562	1	.080
20.00	48X60	31-1564	2	.100

R4-7

AREA (SQ. FT)	SIZE (INCHES)	CONN. D.O.T. #	POSTS	ALUM. THK.
5.00	24X30	31-1526	1	.080
12.00	36X48	31-1536	2	.100
20.00	48X60	31-1546	2	.100

R5 - SERIES

R5-1 *

DO NOT ENTER

LEGEND - WHITE
BACKGROUND - WHITE
CIRCLE - RED

AREA (SQ. FT)	SIZE (INCHES)	CONN. D.O.T. #	POSTS	ALUM. THK.
6.25	30X30	31-1119	1	.080
9.00	36X36	31-1120	2	.080
16.00	48X48	31-1121	2	.100

R5-1a *

WRONG WAY

LEGEND - WHITE
BACKGROUND - RED

AREA (SQ. FT)	SIZE (INCHES)	CONN. D.O.T. #	POSTS	ALUM. THK.
6.00	36X24	31-1122	2	.080
8.75	42X30	31-1123	2	.100

R5-10a(CT)

PROHIBITED
VEH OVER 8FT HIGH
TRAILERS
COMMERCIAL VEH

LEGEND - BLACK
TOP SECTION BACKGROUND - YELLOW
BOTTON SECTION BACKGROUND - WHITE

AREA (SQ. FT)	SIZE (INCHES)	CONN. D.O.T. #	POSTS	ALUM. THK.
32.50	60X78	31-1719	2	.125

R5-10c

NO PEDESTRIANS

AREA (SQ. FT)	SIZE (INCHES)	CONN. D.O.T. #	POSTS	ALUM. THK.
2.00	24X12	31-1774	1	.080

R5-10a(CT)

NO PEDESTRIANS BICYCLES MOTOR BIKES MOTOR SCOOTERS

AREA (SQ. FT)	SIZE (INCHES)	CONN. D.O.T. #	POSTS	ALUM. THK.
9.00	36X36	31-1775	2	.100

R5-11

AUTHORIZED VEHICLES ONLY

AREA (SQ. FT)	SIZE (INCHES)	CONN. D.O.T. #	POSTS	ALUM. THK.
5.00	30X24	31-1790	1	.080
20.00	48X36	31-1792	2	.100

R6 - SERIES

R6-1 *

ONE WAY

LEGEND - WHITE
BACKGROUND - BLACK

AREA (SQ. FT)	SIZE (INCHES)	CONN. D.O.T. #	POSTS	ALUM. THK.
3.00	36X12	31-1188	1	.080
6.75	54X18	31-1189	2	.100

R6-1 *

ONE WAY

LEGEND - WHITE
BACKGROUND - BLACK

AREA (SQ. FT)	SIZE (INCHES)	CONN. D.O.T. #	POSTS	ALUM. THK.
3.00	36X12	31-1177	1	.080
6.75	54X18	31-1178	2	.100

R7 - SERIES

R7-1

NO PARKING ANY TIME

(R) (L)
(D)

LEGEND - RED
BACKGROUND - WHITE

AREA (SQ. FT)	SIZE (INCHES)	CONN. D.O.T. #	POSTS	ALUM. THK.
1.50	12X18	31-0630	1	.080

R7-2a

NO PARKING 0:00 AM TO 0:00 PM

VARIABLE TIMES
(R) (L)
(D)

LEGEND - RED
BACKGROUND - WHITE

AREA (SQ. FT)	SIZE (INCHES)	CONN. D.O.T. #	POSTS	ALUM. THK.
1.50	12X18	31-0603	1	.080

R8 - SERIES

R8-7

EMERGENCY STOPPING ONLY

AREA (SQ. FT)	SIZE (INCHES)	CONN. D.O.T. #	POSTS	ALUM. THK.
12.00	48X36	31-0670	2	.100

R9 - SERIES

R9-3

LEGEND - BLACK
BACKGROUND - WHITE
CIRCLE & DIAGONAL - RED

AREA (SQ. FT)	SIZE (INCHES)	CONN. D.O.T. #	POSTS	ALUM. THK.
2.25	18X18	31-1705	1	.080
4.00	24x24	31-1769	1	.080
6.25	30x30	31-1770	1	.080

R9-3a

NO PEDESTRIAN CROSSING

AREA (SQ. FT)	SIZE (INCHES)	CONN. D.O.T. #	POSTS	ALUM. THK.
1.50	12X18	31-1702	1	.080

R10 - SERIES

R10-6

STOP HERE ON RED
31-0801

STOP HERE ON RED
31-0802

AREA (SQ. FT)	SIZE (INCHES)	CONN. D.O.T. #	POSTS	ALUM. THK.
6.00	24X36		1	.080

R10-7

DO NOT BLOCK INTERSECTION

AREA (SQ. FT)	SIZE (INCHES)	CONN. D.O.T. #	POSTS	ALUM. THK.
5.00	24X30	31-0806	1	.080

R10-10L

LEFT TURN SIGNAL

AREA (SQ. FT)	SIZE (INCHES)	CONN. D.O.T. #	POSTS	ALUM. THK.
7.50	30X36	31-0852	1	.080

R10-11a

NO TURN ON RED

AREA (SQ. FT)	SIZE (INCHES)	CONN. D.O.T. #	POSTS	ALUM. THK.
7.50	30X36	31-0830	1	.080
12.00	36X48	31-0819	2	.100

R10-11b

NO TURN ON RED

AREA (SQ. FT)	SIZE (INCHES)	CONN. D.O.T. #	POSTS	ALUM. THK.
9.00	36X36	31-0816	2	.080

R10-11c(CT)

RIGHT TURN ON RED FROM RIGHT LANE ONLY

AREA (SQ. FT)	SIZE (INCHES)	CONN. D.O.T. #	POSTS	ALUM. THK.
7.50	30X36	31-0847	1	.080

R10-15 *

TURNING VEHICLES YIELD TO PEDS
31-1626 31-1625

LEGEND AND SYMBOLS - BLACK
YIELD SYMBOL - RED
BACKGROUND:
TOP - FLUORESCENT YELLOW-GREEN
BOTTOM - WHITE

AREA (SQ. FT)	SIZE (INCHES)	CONN. D.O.T. #	POSTS	ALUM. THK.
6.25	30X30		1	.080

R11 - SERIES

R11-1

KEEP OFF MEDIAN

AREA (SQ. FT)	SIZE (INCHES)	CONN. D.O.T. #	POSTS	ALUM. THK.
5.00	24X30	31-1915	1	.080
20.00	48X60	31-1918	2	.100

RETROREFLECTIVE STRIP

LEGEND - N/A
BACKGROUND - RED

AREA (SQ. FT)	SIZE (INCHES)	CONN. D.O.T. #	POSTS	ALUM. THK.
1.00	4X48	31-5003	1	.080
2.00	4X72	31-5004	1	.080

NOTES:

1. THE LEGEND "O.S.T.A." SHALL APPEAR ON ALL R- SERIES SIGNS EXCEPT WHEN SUFFIXED WITH THE LETTER "Z".
2. FOR SPECIFIC SIGN DESIGN CONTACT CONN. D.O.T., DIVISION OF TRAFFIC ENGINEERING.
   FOR BOLT HOLE PATTERN REFER TO FHWA PUBLICATION "STANDARD HIGHWAY SIGNS".
   SIGNS OF DIFFERENT DIMENSIONS TO BE ERECTED ON THE SAME POSTS, OR SPAN/MAST ARM MOUNTED, MAY REQUIRE SPECIAL BOLT HOLE PATTERNS.
3. POSTS - SEE STANDARD SHEET TR-1208_02 - "METAL SIGN POSTS AND SIGN MOUNTING DETAILS."
4. POSTS SHALL BE 4 LBS./FT.
5. SIGNS SHALL BE FABRICATED OF ONE CONTINUOUS PIECE OF SHEET ALUMINUM. SPLICING OF SHEET ALUMINUM WILL NOT BE ACCEPTED.
6. FOR OVERHEAD MOUNTED SIGNS, SEE STANDARD SHEET TR-1114_01 - "BONDING AND UTILITY POLE ATTACHMENT DETAILS, SIGN HANGER, "Y" CLAMP DETAIL."

COLORS:

BACKGROUND - WHITE - EXCEPT AS NOTED.

LEGEND - BLACK - EXCEPT AS NOTED.

ALL SIGNS TO USE TYPE IX RETROREFLECTIVE SHEETING WITH THE EXCEPTION OF OVERHEAD MOUNTED SIGNS AND SIGNS DESIGNATED WITH AN * WHICH SHALL BE TYPE XI RETROREFLECTIVE SHEETING.

SLR
99 REALTY DRIVE
CHESHIRE, CT 06410
203.271.1773
SLRCONSULTING.COM

DESCRIPTION	DATE	BY

MISCELLANEOUS DETAILS

PEDESTRIAN SAFETY IMPROVEMENTS

MAIN STREET SOUTH AND POVERTY ROAD
SOUTHBURY, CONNECTICUT

MSM	ABW	MSM
DESIGNED	DRAWN	CHECKED

SCALE: NOT TO SCALE

DATE: JULY 31, 2025

PROJECT NO.: 0130-0194

DRAWING NO.: MDS-07

SHEET NO.: 20

*ONLY STANDARD SHEETS MARKED WITH AN "✓" ARE IN THIS PROJECT # SLR12097.00034 **REVISED OR ADDED

✓*	SHEET NO.	TITLE	APPROVAL DATE**
	HW-211_01	ANTI-TRACKING PAD	11-09-22
	HW-286_01	DRAINAGE TRENCH EXCAVATION	11-09-22
	HW-505 01a	STRAIGHT ENDWALLS	01-21-25
	HW-505 01b	STEEL REINFORCING FOR STRAIGHT ENDWALLS (2" DIFF BASE TO FLOW LINE)	01-05-24
	HW-505 01c	STEEL REINFORCING FOR STRAIGHT ENDWALLS (STANDARD RIPRAP APPLICATION)	01-05-24
	HW-505_02	TYPE "D-G" & "L" ENDWALLS	01-05-24
	HW-586_01	CATCH BASIN AND DROP INLET TYPES "C" AND "C-L" STRUCTURES	01-05-24
	HW-586_02	CATCH BASIN (TYPES "C" AND "C-L") FOR DOUBLE GRATE TYPE I STRUCTURES	01-05-24
	HW-586_03	CATCH BASIN (TYPES "C" AND "C-L") FOR DOUBLE GRATE TYPE II STRUCTURES	01-05-24
	HW-586_04	PRECAST CATCH BASIN AND ROUND STRUCTURE	10-17-24
	HW-586_05	PRECAST CATCH BASIN TYPES FOR DOUBLE GRATE TYPE I	10-17-24
	HW-586_06	PRECAST CATCH BASIN TYPES FOR DOUBLE GRATE TYPE II	10-17-24
	HW-586 07a	CATCH BASIN TYPE "C" AND "C-L" TOPS	01-05-24
	HW-586 07b	CATCH BASIN TYPE "C" AND "C-L" DOUBLE GRATE TYPE I TOPS	11-09-22
	HW-586 07c	CATCH BASIN TYPE "C" AND "C-L" DOUBLE GRATE TYPE II TOPS	11-08-22
	HW-586 07d	CATCH BASIN TYPE "C-G" AND "C-M" BARRIER CURB TOPS	11-09-22
	HW-586_08	CATCH BASIN FRAMES AND GRATES	11-09-22
	HW-586_09	CATCH BASIN LOCK DOWN TOPS	11-09-22
	HW-586_10a	MANHOLE FRAME AND COVER	01-05-24
	HW-586_10b	MANHOLE FRAME AND GRATE	01-05-24
	HW-586_10c	REINFORCED PRECAST CONCRETE MANHOLE	11-08-22
	HW-586_10d	MANHOLE NON-PRECAST CONCRETE UNIT	11-08-22
	HW-686_01a	CONCRETE PIPE CONNECTION SHEET 1	11-08-22
	HW-686_01b	CONCRETE PIPE CONNECTION SHEET 2	11-08-22
	HW-686_02a	DRAINANGE PIPE ENDS SHEET 1 [CORRUGATED METAL PIPE]	11-08-22
	HW-686_02b	DRAINAGE PIPE ENDS SHEET 2 [CONCRETE PIPE]	11-08-22
	HW-751_01	UNDERDRAINS AND UNDERDRAIN OUTLETS	10-17-24
	HW-803_01	PAVED APRONS	11-08-22
✓	HW-811_01	CONCRETE CURBING	11-08-22
	HW-813_01	GRANITE STONE TRANSITION CURBING	11-08-22
	HW-813_02	STONE CURBING	11-08-22
✓	HW-815_01	BITUMINOUS CONCRETE CURBING	11-08-22

✓*	SHEET NO.	TITLE	APPROVAL DATE**
	HW-821_01a	TRANSITION - 45" F-SHAPE TO 45" VERTICAL SHAPE SHEET 1	11-08-22
	HW-821_01b	TRANSITION - 45" F-SHAPE TO 45" VERTICAL SHAPE SHEET 2	11-08-22
	HW-821_01c	TRANSITION - 45" F-SHAPE TO 45" VERTICAL SHAPE SHEET 3	11-08-22
	HW-821_02a	45" F-SHAPE PRECAST CONCRETE BARRIER CURB SHEET 1	11-08-22
	HW-821_02b	45" F-SHAPE PRECAST CONCRETE BARRIER CURB SHEET 2	11-08-22
	HW-821_03a	TRANSITION - 32" JERSEY SHAPE TO 45" VERTICAL SHAPE SHEET 1	11-08-22
	HW-821_03b	TRANSITION - 32" JERSEY SHAPE TO 45" VERTICAL SHAPE SHEET 2	11-08-22
	HW-821_03c	TRANSITION - 32" JERSEY SHAPE TO 45" VERTICAL SHAPE SHEET 3	11-08-22
	HW-821_03d	TRANSITION - 32" JERSEY SHAPE TO 45" VERTICAL SHAPE SHEET 4	11-08-22
	HW-821_03e	TRANSITION - 32" JERSEY SHAPE TO 45" F-SHAPE	11-08-22
	HW-821_04a	MERRITT PARKWAY NARROW MEDIAN BARRIER	11-08-22
	HW-821_04b	MERRITT PARKWAY - 2' WIDE MEDIAN BARRIER AND ROADSIDE BARRIER	11-08-22
	HW-821_05a	TRANSITION - 45" F-SHAPE TO 54" VERTICAL SHAPE SHEET 1	11-08-22
	HW-821_05b	TRANSITION - 45" F-SHAPE TO 54" VERTICAL SHAPE SHEET 2	11-08-22
	HW-821_06	54" VERTICAL SHAPE BARRIER	11-08-22
	HW-821_07	MISCELLANOUS DETAILS FOR BARRIER TRANSITIONS	11-08-22
	HW-821_08a	F-SHAPE CONC. BARRIER CURB (21"x45") TRANSITION FOR THRIE-BEAM	10-17-24
	HW-821_08b	F-SHAPE CONC. BARRIER CURB (21"x45") TRANSITION FOR THRIE-BEAM - REINF.	11-08-22
	HW-821_09a	SINGLE SLOPE CONC. BARRIER CURB (20"x42") TRANS. FOR THRIE-BEAM	11-08-22
	HW-821_09b	SINGLE SLOPE CONC. BARRIER CURB (20"x42") TRANS. FOR THRIE-BEAM - REINF.	11-08-22
	HW-821_10a	VERTICAL FACE CONC. (21"x54") TRANSITION FOR THRIE-BEAM	11-08-22
	HW-821 10b	VERTICAL FACE CONC. (21"x54") TRANSITION FOR THRIE-BEAM REINF.	11-08-22
	HW-821_11a	42" SINGLE SLOPE PRECAST CONCRETE BARRIER CURB -SHEET 1	01-05-24
	HW-821_11b	42" SINGLE SLOPE PRECAST CONCRETE BARRIER CURB -SHEET 2	01-05-24
	HW-822_01	TEMPORARY PRECAST CONCRETE BARRIER CURB	11-08-22
	HW-822 02a	TEMPORARY TRAFFIC BARRIER - DETAILS	11-08-22
	HW-822 02b	TEMPORARY TRAFFIC BARRIER (BOLTED)	01-23-25
	HW-822 02c	TEMPORARY TRAFFIC BARRIER & TEMPORARY TRAFFIC BARRIER (PINNED)	01-23-25
	HW-905_01	STONE WALL FENCE	11-09-22
	HW-906_01	WIRE FENCE	11-08-22

NOT TO SCALE

SIGNATURE BLOCK:
OFFICE OF ENGINEERING
2800 BERLIN TURNPIKE
NEWINGTON, CT 06111

CTDOT CONNECTICUT DEPARTMENT OF TRANSPORTATION

CTDOT STANDARD SHEET

STANDARD SHEET TITLE:
HIGHWAY STANDARD SHEET INDEX

STANDARD SHEET NO.:
1 of 2

PLOTTED DATE: 1/23/2025

*ONLY STANDARD SHEETS MARKED WITH AN " ✓ " ARE IN THIS PROJECT # SLR12097.00034 **REVISED OR ADDED

✓*	SHEET NO.	TITLE	APPROVAL DATE**
	HW-910_01	W-BEAM METAL BEAM RAIL HARDWARE	11-08-22
	HW-910_02	METAL BEAM RAIL (TYPE R-B 350) GUIDERAIL	11-08-22
	HW-910_03	METAL BEAM RAIL (TYPE MD-B 350) GUIDERAIL	11-08-22
	HW-910_04	METAL BEAM RAIL (TYPE R-B 350) SYSTEMS 5, 5A, & 6	11-08-22
	HW-910_05	METAL BEAM RAIL R-B 350 SPAN TYPE I, II, III SECTIONS	11-08-22
	HW-910_06	R-B 350 BRIDGE ATTACHMENT SAFETY SHAPE PARAPET	11-08-22
	HW-910_07	R-B 350 BRIDGE ATTACHMENT VERTICAL SHAPE PARAPET	11-08-22
	HW-910 09a	MISCELLANEOUS GUIDERAIL TRANSITIONS SHEET 1	11-08-22
	HW-910 09b	MISCELLANEOUS GUIDERAIL TRANSITIONS SHEET 2	11-08-22
	HW-910 10	METAL BEAM RAIL 8" x 6" BOX BEAM	11-08-22
	HW-910 11	CURVED GUIDERAIL TREATMENT DETAIL	11-08-22
	HW-910_12a	MERRITT PARKWAY GUIDERAIL LEADING END ATTACHMENTS AND SYSTEMS 2&3	11-08-22
	HW-910_12b	MERRITT PARKWAY GUIDERAIL HARDWARE DETAILS	11-08-22
	HW-910_12c	MERRITT PARKWAY GUIDERAIL TRAILING END ATTACHMENTS	11-02-22
	HW-910_12d	MERRITT PARKWAY MEDIAN GUIDERAIL AND END ANCHOR	10-17-24
	HW-910_13a	THRIE-BEAM METAL BEAM RAIL HARDWARE	11-08-22
	HW-910_13b	THRIE-BEAM TRANSITIONS	11-08-22
	HW-910_14a	THRIE-BEAM 350 BRIDGE ATTACHMENT	11-08-22
	HW-910_14b	THRIE-BEAM 350 GUIDERAIL TRANSITION TO R-B 350 GUIDERAIL	11-08-22
	HW-910_15	MD-B 350 MEDIAN BARRIER SAFETY SHAPE ATTACHMENT TYPE I	11-08-22
	HW-910_16	MD-B 350 MEDIAN BARRIER SAFETY SHAPE ATTACHMENT TYPE II	11-08-22
	HW-910_17	R-B TERMINAL SECTION	11-08-22
	HW-910_18	METAL BEAM RAIL (TYPE MD-I) GUIDERAIL	11-08-22
	HW-910_19a	METAL BEAM RAIL (MODIFIED TYPE R-I) AND END ANCHORAGE TYPE I	10-17-24
	HW-910_19b	METAL BEAM RAIL (MODIFIED TYPE R-I) AND END ANCHORAGE TYPE II	10-17-24
	HW-910_19c	METAL BEAM RAIL (MODIFIED TYPE R-I) SYSTEMS 2 AND 3	11-08-22
	HW-910_20	MASH W-BEAM HARDWARE	10-17-24
	HW-910_21	METAL BEAM RAIL (R-B MASH) GUIDERAIL	01-05-24
	HW-910_22	METAL BEAM RAIL (MD-B MASH) GUIDERAIL	11-08-22
	HW-910_23	METAL BEAM RAIL (R-B MASH) HALF & QUARTER POST SPACING GUIDERAIL	11-08-22
	HW-910_24	METAL BEAM RAIL SPAN SECTION TYPES II AND III	11-08-22

✓*	SHEET NO.	TITLE	APPROVAL DATE**
	HW-910_25a	METAL BEAM RAIL TRANSITION 350 TO MASH	10-17-24
	HW-910_25b	METAL BEAM RAIL MEDIAN APPLICATION TRANSITION 350 TO MASH GUIDERAIL	01-05-24
	HW-910_26	THRIE-BEAM ATTACHMENT HARDWARE	11-08-22
	HW-910_27	THRIE-BEAM ATTACHMENT	11-08-22
	HW-910_29	THRIE-BEAM BRIDGE ATTACHMENT TRAILING END	02-02-24
	HW-911_01	R-B END ANCHORAGE TYPE I AND II	10-17-24
	HW-911_02	MD-B END ANCHORAGE TYPE I	10-17-24
	HW-911_03	ANCHOR IN EARTH CUT SLOPE & ANCHOR IN ROCK CUT SLOPE	01-05-24
	HW-911_05	MERRITT PARKWAY GUIDERAIL END ANCHORS	11-08-22
	HW-913_01a	CHAIN LINK FENCE	11-08-22
	HW-913_01b	CHAIN LINK FENCE HARDWARE	11-08-22
	HW-913_02	CHAIN LINK FENCE GATES	11-08-22
	HW-918_01a	THREE CABLE GUIDERAIL (I-BEAM POSTS) SHEET 1	11-08-22
	HW-918_01b	THREE CABLE GUIDERAIL (I-BEAM POSTS) SHEET 2	11-08-22
	HW-918_01c	THREE CABLE GUIDERAIL (I-BEAM POSTS) SHEET 3	11-08-22
✓	HW-921_01	CONCRETE SIDEWALKS	11-08-22
✓	HW-922_01	BITUMINOUS CONCRETE SIDEWALK AND BITUMINOUS CONCRETE DRIVEWAY	11-08-22
	HW-924_01	CONCRETE DRIVEWAY RAMPS	10-17-24
	HW-930_01	OBJECT MARKER (MAINTENANCE)	10-17-24
	HW-949_01a	LANDSCAPE PLANTING	11-09-22
	HW-949_01b	TREE STAKING	11-02-22
	HW-1800_01	GRADING PLAN FOR IMPACT ATTENUATION SYSTEMS (FLARED AND TANGENTIAL)	10-17-24
	HW-1800 02	GRADING PLAN FOR IMPACT ATTENUATION SYSTEMS (MEDIAN/GORE)	10-17-24

NOT TO SCALE

SIGNATURE BLOCK:
OFFICE OF ENGINEERING
2800 BERLIN TURNPIKE
NEWINGTON, CT 06111

CTDOT CONNECTICUT DEPARTMENT OF TRANSPORTATION

CTDOT STANDARD SHEET

STANDARD SHEET TITLE:
HIGHWAY STANDARD SHEET INDEX

STANDARD SHEET NO.:
2 OF 2

PLOTTED DATE: 1/23/2025

GENERAL NOTE:

1. PRECAST CONCRETE CURBING MAY BE CAST BY THE MANUFACTURER WITH OPTIONAL LIFTING AND DOWEL BAR HOLES.

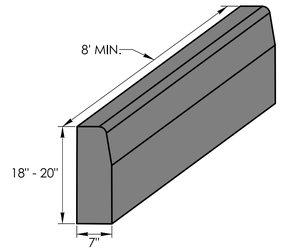

CONCRETE CURBING (6" REVEAL)

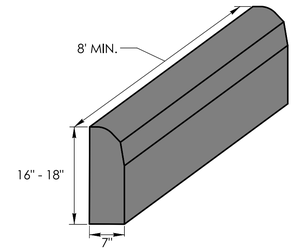

CONCRETE PARK CURBING (4" REVEAL)

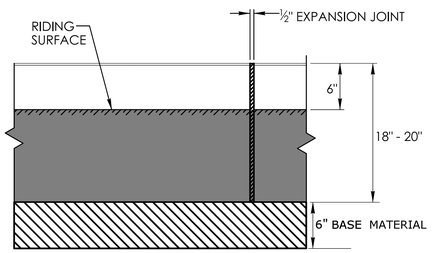

FRONT ELEVATION

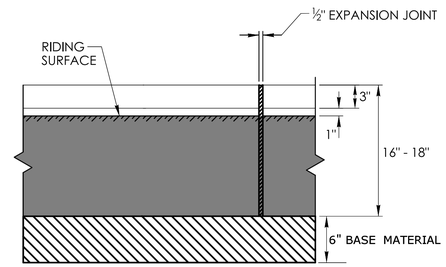

FRONT ELEVATION

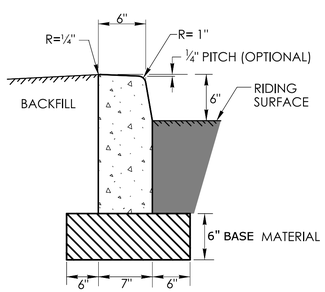

SECTION

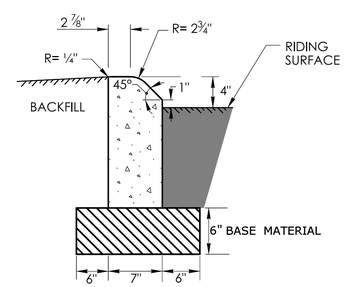

SECTION

	NOT TO SCALE	SIGNATURE BLOCK: OFFICE OF ENGINEERING 2800 BERLIN TURNPIKE NEWINGTON, CT 06111	SUBMITTED BY: Digitally signed by Leo Fontaine, P.E. Date: 2024.12.16 14:00:51-05'00'	APPROVED BY: Digitally signed by Michael N. Calabrese, P.E. Date: 2025.01.21 13:13:38-05'00'	CTDOT CONNECTICUT DEPARTMENT OF TRANSPORTATION	CTDOT STANDARD SHEET	STANDARD SHEET TITLE: CONCRETE CURBNG	STANDARD SHEET NO.: HW-811_01

PLOTTED DATE: 10/22/2024

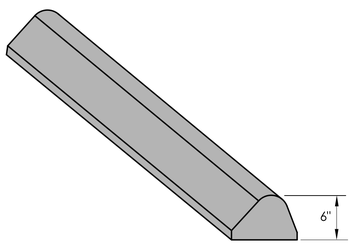

BITUMINOUS CONCRETE LIP CURBING
(6" HIGH)

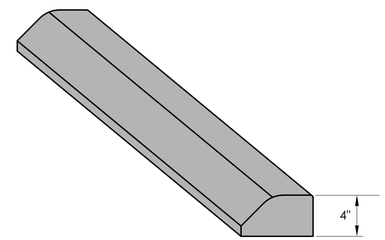

BITUMINOUS CONCRETE PARK CURBING
(4" HIGH)

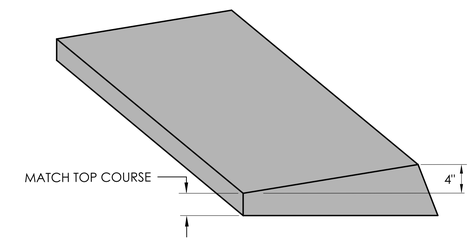

BITUMINOUS CONCRETE BERM CURBING
(4" HIGH)

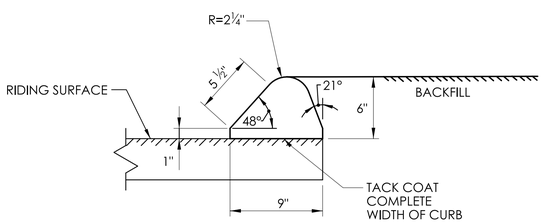

SECTION

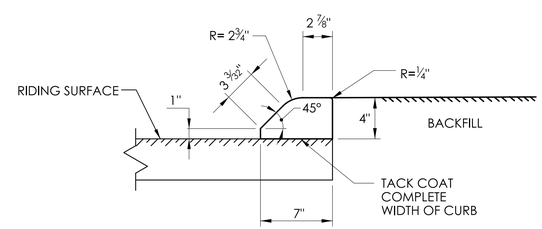

SECTION

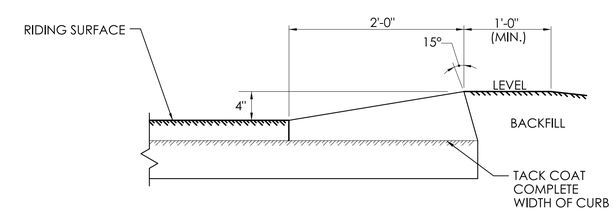

SECTION

	NOT TO SCALE	SIGNATURE BLOCK: OFFICE OF ENGINEERING 2800 BERLIN TURNPIKE NEWINGTON, CT 06111	SUBMITTED BY: Digitally signed by Leo Fontaine, P.E. Date: 2024.12.16 14:00:18-05'00'	APPROVED BY: Digitally signed by Michael N. Calabrese, P.E. Date: 2025.01.21 13:16:01-05'00'	CTDOT CONNECTICUT DEPARTMENT OF TRANSPORTATION	CTDOT STANDARD SHEET	STANDARD SHEET TITLE: **BITUMINOUS CONCRETE CURBING**	STANDARD SHEET NO.: **HW-815_01**

PLOTTED DATE: 10/22/2024

GENERAL NOTES:

1. SEE CONCRETE SIDEWALK RAMPS GUIDE SHEETS FOR PEDESTRIAN RAMP TYPES.
2. ALL CURBING SHALL BE INSTALLED AS EITHER PRECAST OR CAST IN PLACE AS DIRECTED.

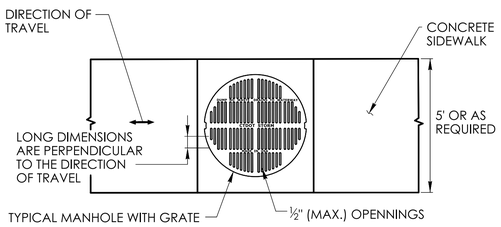

PEDESTRIAN ACCESS ROUTE OVER A MANHOLE WITH GRATE

1. HORIZONTAL OPENINGS IN GRATES AND JOINTS MUST NOT BE MORE THAN ½ INCH
2. ELONGATED OPENINGS IN GRATES MUST BE PLACED SO THAT THE LONG DIMENSION IS PERPENDICULAR TO THE DIRECTION OF TRAVEL

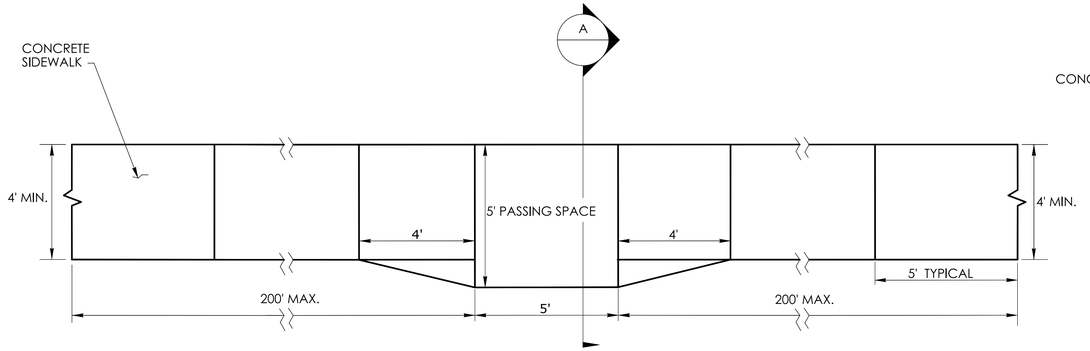

5' PASSING SPACE FOR 4' WIDE SIDEWALK PLAN

PASSING SPACES SHALL BE PROVIDED AT INTERVALS OF 200' MAXIMUM FOR SIDEWALKS LESS THAN 5' IN WIDTH

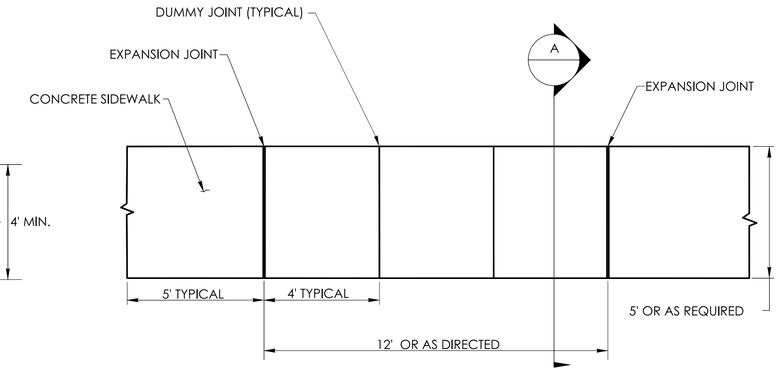

5' WIDE SIDEWALK PLAN

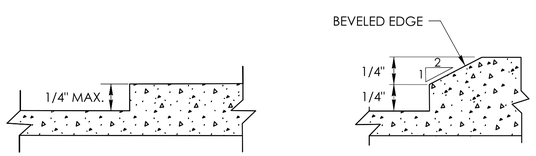

VERTICAL SURFACE DISCONTINUITIES

VERTICAL SURFACE DISCONTINUITIES MUST BE BEVELED TO A HEIGHT NOT GREATER THAN ¼ INCH. THE BEVEL MUST BE THE ENTIRE WIDTH OF THE DISCONTINUITY

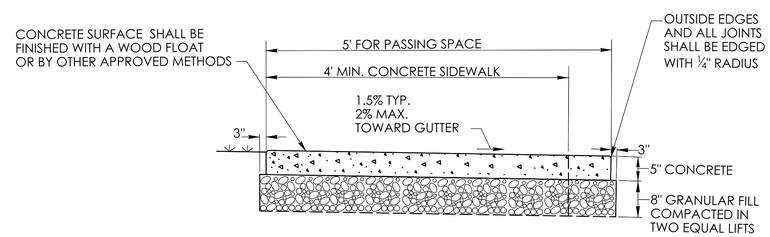

5' PASSING SPACE FOR 4' WIDE SIDEWALK

SECTION A

	NOT TO SCALE	SIGNATURE BLOCK: OFFICE OF ENGINEERING 2800 BERLIN TURNPIKE NEWINGTON, CT 06111	SUBMITTED BY: Digitally signed by Leo Fontaine, P.E. Date: 2024.12.19 15:11:56-05'00'	APPROVED BY: Digitally signed by Michael N. Calabrese, P.E. Date: 2025.01.29 12:47:10-05'00'	CTDOT CONNECTICUT DEPARTMENT OF TRANSPORTATION	CTDOT STANDARD SHEET	STANDARD SHEET TITLE: CONCRETE SIDEWALKS	STANDARD SHEET NO.: HW-921_01

PLOTTED DATE: 10/23/2024

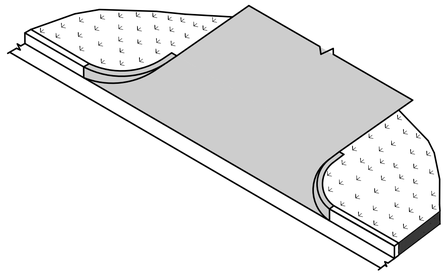

BITUMINOUS CONCRETE DRIVEWAY

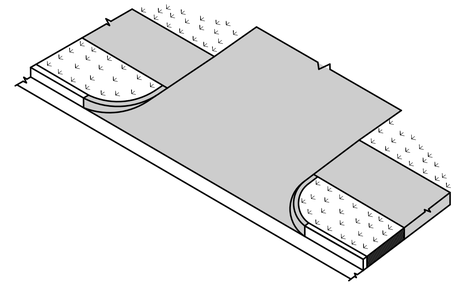

BITUMINOUS CONCRETE DRIVEWAY WITH A PEDESTRIAN SIDEWALK SETBACK

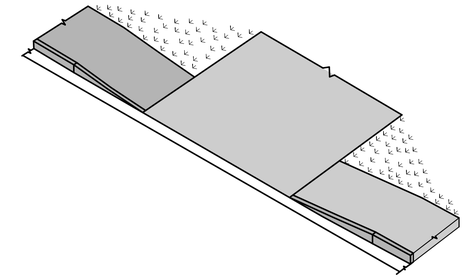

BITUMINOUS CONCRETE DRIVEWAY WITH PEDESTRIAN SIDEWALK AT THE CURB

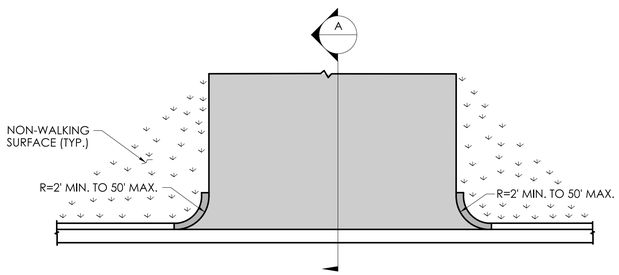

PLAN

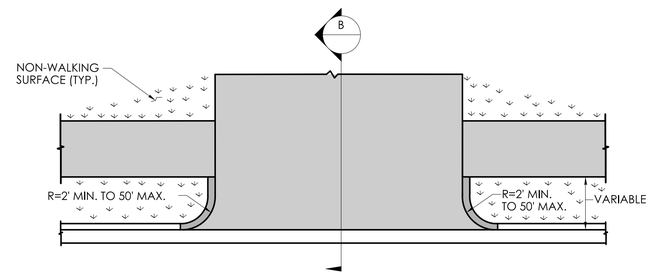

PLAN

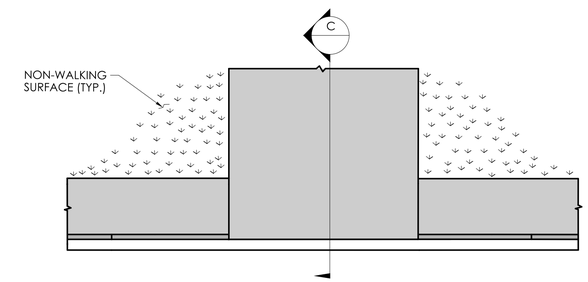

PLAN

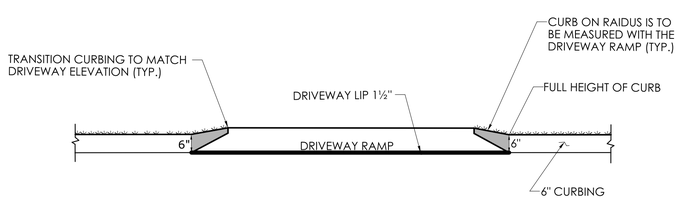

ELEVATION

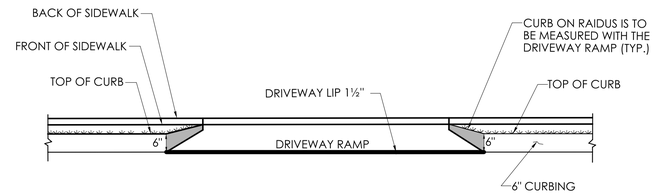

ELEVATION

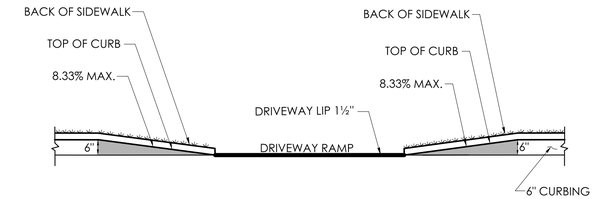

ELEVATION

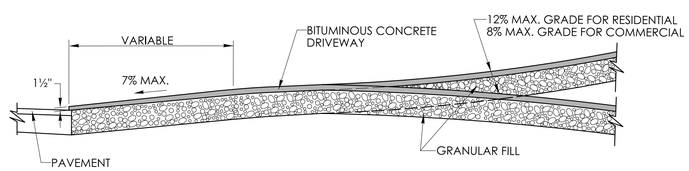

SECTION A

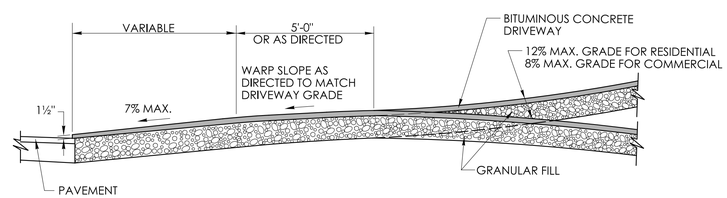

SECTION B

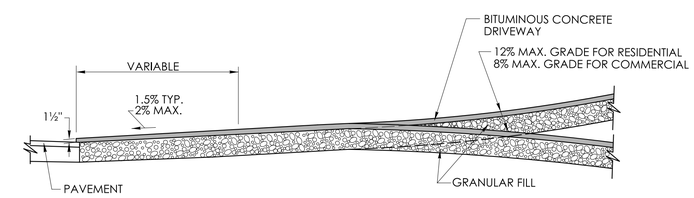

SECTION C

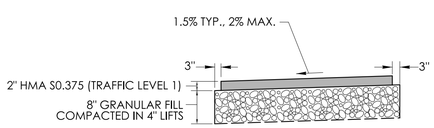

BITUMINOUS CONCRETE SIDEWALK

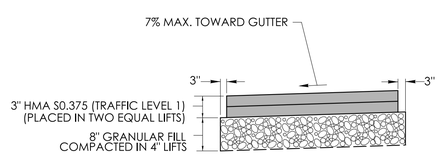

BITUMINOUS CONCRETE DRIVEWAY

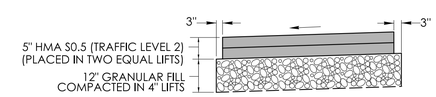

COMMERCIAL BITUMINOUS CONCRETE DRIVEWAY

	NOT TO SCALE	SIGNATURE BLOCK: OFFICE OF ENGINEERING 2800 BERLIN TURNPIKE NEWINGTON, CT 06111	SUBMITTED BY: Digitally signed by Leo Fontaine, P.E. Date: 2024.12.19 15:11:01-05'00'	APPROVED BY: Digitally signed by Michael N. Calabrese, P.E. Date: 2025.01.29 12:47:54-05'00'	CONNECTICUT DEPARTMENT OF TRANSPORTATION	CTDOT STANDARD SHEET	STANDARD SHEET TITLE: **BITUMINOUS CONCRETE SIDEWALK AND BITUMINOUS CONCRETE DRIVEWAY**	STANDARD SHEET NO.: **HW-922_01**

PLOTTED DATE: 10/23/2024

ONLY STANDARD SHEETS MARKED WITH AN "✓" ARE IN THIS PROJECT # SLR12097.00034

**REVISED OR ADDED

	SHEET NO.	TITLE	APPROVAL DATE**
✓	TR-1000_01	GENERAL CLAUSES (TEST PROCEDURES)	1/2014
✓	TR-1001_01	TRENCHING & BACKFILLING, ELECTRICAL CONDUIT	2/2024
✓	TR-1002_01	TRAFFIC CONTROL FOUNDATIONS	2/2024
✓	TR-1010_01	CONCRETE HANDHOLE	2/2024
✓	TR-1102_01	PEDESTALS, PEDESTRIAN SIGNALS	4/2012
	TR-1105_01	TRAFFIC SIGNALS AND CABLE ASSIGNMENTS	8/2018
✓	TR-1107_01	PEDESTRIAN PUSH BUTTON	8/2018
✓	TR-1108_01	CONTROLLERS	5/2013
	TR-1111_01	LOOP VEHICLE DETECTOR AND SAWCUT	4/2014
	TR-1113_01	CONTROL CABLE	4/2014
	TR-1114_01	BONDING & UTILITY POLE ATTACHMENT DETAILS, SIGN HANGER, "Y" CLAMP DETAILS	8/2018

	SHEET NO.	TITLE	APPROVAL DATE**
	TR-1205_01	DELINEATION, DELINEATOR AND OBJECT MARKER DETAILS	8/2018
✓	TR-1208_01	SIGN PLACEMENT AND RETROREFLECTIVE STRIP DETAILS	8/2018
✓	TR-1208_02	METAL SIGN POSTS AND SIGN MOUNTING DETAILS	6/2017
✓	TR-1210_04	PAVEMENT MARKINGS LINES AND SYMBOLS	8/2018
	TR-1210_05	PAVEMENT MARKINGS FOR DIVIDED HIGHWAYS	4/2017
	TR-1210_06	PAVEMENT MARKINGS FOR DIVIDED HIGHWAYS	8/2018
	TR-1210_07	PAVEMENT MARKINGS FOR EXIT RAMPS	4/2017
✓	TR-1210_08	PAVEMENT MARKINGS FOR NON FREEWAYS	8/2018
	TR-1210_09	PAVEMENT MARKINGS FOR BICYCLE LANES, PARKING STALLS, AND RR CROSSINGS	4/2017
✓	TR-1220_01	SIGNS FOR CONSTRUCTION AND PERMIT OPERATIONS	8/2018
✓	TR-1220_02	CONSTRUCTION SIGN SUPPORTS AND CHANNELIZING DEVICES	8/2018

STANDARD SHEETS SHALL BE USED WITH STANDARD SPECIFICATIONS

NOT TO SCALE

SIGNATURE BLOCK:
OFFICE OF ENGINEERING
2800 BERLIN TURNPIKE
NEWINGTON, CT 06111

SUBMITTED BY:

APPOVED BY:

STATE OF CONNECTICUT
DEPARTMENT OF TRANSPORTATION

CTDOT STANDARD SHEET

STANDARD SHEET TITLE:
TRAFFIC STANDARD SHEET INDEX

STANDARD SHEET NO.:
TR-STD_INDEX

DOCUMENT ALL LOOP DETECTOR VALUES BOTH CALCULATED AND MEASURED.

DEFINITIONS:

LOOP: #14 AWG WIRE IN SAWCUT, TERMINATED IN HANDHOLE, IMSA SPEC 51-7.
LEAD-IN: 14/2 SHIELDED TWISTED PAIR CABLE FROM HANDHOLE TO CONTROLLER, IMSA SPEC 50-2.
LOOP CIRCUIT: LOOP SAWCUT WIRE SPLICED TO 14/2 LEAD-IN CABLE.
AMPLIFIER: ELECTRONIC DEVICE CONNECTED TO LOOP CIRCUIT. SENSES CHANGE IN RESONANT FREQUENCY AND CREATES AN OUTPUT TO THE CONTROLLER.
MEGOHMETER: INSTRUMENT SPECIFICALLY DESIGNED TO TEST THE INSULATION RESISTANCE OF A CIRCUIT. COMMON MANUFACTURERS: AMEC®, AMPROBE®, FLUKE®, MEGGER®.

1: RESISTANCE:

1a: INSULATION RESISTANCE: PERFORM A 600 VOLT (MINIMUM) MEGOHMETER TEST ON LOOP CIRCUIT. THE LOOP AMPLIFIER MUST BE DISCONNECTED FROM THE LOOP CIRCUIT OR THE LOOP AMPLIFIER WILL BE DAMAGED. THE RESISTANCE OF THE LOOP WIRE TO GROUND MUST BE GREATER THAN 100 MEG OHMS.

1b: WIRE RESISTANCE: MEASURE THE DC RESISTANCE OF THE LOOP CIRCUIT. THE LOOP CIRCUIT MUST BE DISCONNECTED FROM THE AMPLIFIER. USING AN OHMMETER CONNECTED ACROSS THE LOOP CIRCUIT, MEASURE THE DC RESISTANCE OF THE CONDUCTORS. THE RESISTANCE SHOULD BE LESS THAN 4 OHMS.

NOTE: ALL TESTS SHALL BE DONE AT THE CONTROLLER ASSEMBLY (CA), HOWEVER IT IS RECOMMENDED TO PERFORM A PRELIMINARY MEGOHMETER TEST AT THE HANDHOLE PRIOR TO SEALING THE SAWCUT AND SPLICING TO THE LEAD-IN. IF A DEFECTIVE LOOP WIRE IS FOUND, IT MAY BE EASILY REPLACED.

2: LOOP CIRCUIT INDUCTANCE:

2a: CALCULATE INDUCTANCE OF LOOP (L_{LOOP}) AND LEAD-IN CABLE ($L_{14/2}$).

LOOP INDUCTANCE (ENGLISH)

$L_{LOOP} = (P/4)(N^2 + N)$

LEAD-IN INDUCTANCE

$L_{14/2} = (0.24\,\mu h/FT)(D)$

LOOP INDUCTANCE (METRIC)

$L_{LOOP} = (3.28P/4)(N^2 + N)$

LEAD-IN INDUCTANCE

$L_{14/2} = (0.78\,\mu h/m)(D)$

WHERE:

L_{LOOP} = INDUCTANCE OF INDIVIDUAL LOOP SEGMENTS IN MICROHENRIES (μh).
$L_{14/2}$ = INDUCTANCE OF LEAD-IN CABLE.
P = PERIMETER OF INDIVIDUAL LOOP SEGMENT, IN FEET OR METERS.
N = NUMBER OF TURNS.
D = LENGTH OF LEAD-IN CABLE FROM SPLICE IN HANDHOLE TO CONTROLLER, IN FEET OR METERS.
$L_T = L_1 + L_2 + L_3$ etc.,
(TOTAL INDUCTANCE OF SEGMENTED LOOP SPLICED IN SERIES.)
$L_T = 1 / [(1/L_1) + (1/L_2) + (1/L_3) + \text{etc.}]$,
(TOTAL INDUCTANCE OF SEGMENTED LOOP SPLICED IN PARALLEL.

WHERE:

L_T = TOTAL INDUCTANCE OF THE SEGMENTED ARRANGEMENT.
L_1, L_2, L_3 = INDUCTANCE OF INDIVIDUAL LOOP SEGMENTS.

EXAMPLE: (IN ENGLISH)

6' x 6', 4 TURNS, APPROXIMATELY 300' FROM THE CONTROLLER

$L_{LOOP} = (24/4)(4^2 + 4)$
$L_{LOOP} = (6)(20)$
$L_{LOOP} = 120\,\mu h$

$L_{14/2} = (0.24\,\mu h/FT)(300)$
$L_{14/2} = (0.24)(300)$
$L_{14/2} = 72\,\mu h$

2b: MEASURE INDUCTANCE OF LOOP AND LEAD-IN AT CONTROLLER. USE INSTRUMENT DESIGNED TO MEASURE LOOP CIRCUIT INDUCTANCE.

3: POWER INTERRUPTION:

AFTER THE AMPLIFIER HAS TUNED AND IS OPERATING, DISCONNECT POWER BY REMOVING FUSE OR HARNESS CONNECTOR. RETURN POWER TO THE AMPLIFIER AND CONFIRM IT RE-TUNES AUTOMATICALLY WITHOUT ANY MANUAL ADJUSTMENTS.

INDUCTIVE LOOP TEST PROCEDURE

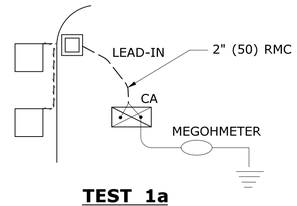

TEST 1a

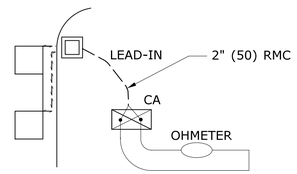

TEST 1b

PROJECT:
TOWN: LOCATION:

LOOP NUMBER	RESISTANCE OHMS		INDUCTANCE MICROHENRIES (μh)		AMPLIFIER POWER INTERRUPTION
	TO GROUND (1a)	LOOP WIRE (1b)	CALCULATED (2a)	MEASURED (2b)	PASS/FAIL (3)
D1 FRONT					
D1 REAR					
D2A					
D2B					
D4A FRONT					
D4B REAR					
D5					
D6A					
D6B					

LOOP CIRCUIT TEST DATA (EXAMPLE)

PIN	COLOR	FUNCTION
A	WHITE	110 VAC Neutral
B	BROWN	Output Relay Common (moving contact)
C	BLACK	110 VAC (Fused)
D	RED	Loop
E	ORANGE	Loop
F	YELLOW	Output Relay Contact (Closes with moving contact when detecting vehicle)
G	BLUE	Output Relay Contact (Opens with moving contact when detecting vehicle)
H	GREEN	Chassis Ground
J	GREY	110 VAC Delay/Extend Override
Shell		Ground (shall be connected to pin H in the connector)

DETECTOR AMPLIFIER PIN DESIGNATION

TEST PROCEDURE:

- INSERT ELECTRODE (C) A DISTANCE (D) FROM THE FOUNDATION. RECOMMEND A MINIMUM 50'.
- CONNECT A VOLTAGE SOURCE AND AMMETER BETWEEN THE FOUNDATION GROUND ROD (X) AND C.
- MEASURE THE CURRENT FLOW (I) BETWEEN X AND C.
- INSERT POTENTIAL ELECTRODE (P) AT 5' (1500) INTERVALS IN A STRAIGHT LINE TO ELECTRODE C.
- MEASURE VOLTAGE (E) AT EACH LOCATION OF P.
- CALCULATE RESISTANCE (R) AT EACH LOCATION OF P USING THE FORMULA R=E/I.
- PLOT THE VALUES ON A RxD GROUND RESISTANCE CHART.
- THE ACTUAL GROUND RESISTANCE IS WHERE THE PLOTTED CURVE IS RELATIVELY FLAT, USUALLY AT 62%± OF D.
  SEE EXAMPLE CHART: CURVE FLATTENS OUT AT 10 OHMS, APPROXIMATELY 30' (9000) FROM FOUNDATION.
- IF GROUND RESISTANCE IS GREATER THAN 10 OHMS, PERFORM CORRECTIVE ACTION AND RE-TEST.

SUGGESTED CORRECTIVE ACTION:

A. INSTALL ADDITIONAL 10' (3000) GROUND ROD(S).
REFER TO NESC SECTION 09, RULE 94.B.2.
DRIVE ADDITIONAL GROUND RODS NO CLOSER TO FOUNDATION THAN 6' (1800). IF MORE THAN ONE IS NEEDED, SPACE MINIMUM 6' (1800) APART.
BONDS TO ADDITIONAL GROUND ROD(S) SHALL BE MADE BY A CLAMP DESIGN FOR DIRECT BURIAL OR BY EXOTHERMIC WELDING TECHNIQUE.
TOP OF ADDITIONAL GROUND ROD(S) SHALL BE 6" (150) BELOW GRADE.

B. IN AREAS OF SHALLOW BEDROCK, INSTALL A GROUND GRID OR ARRAY CONSISTING OF BURIED WIRE, RODS, STRIPS OR PLATES.
REFER TO NESC SECTION 09, RULE 94.B.3.
REFER TO NEC SECTION 250.
MINIMUM DEPTH OF 18" (450).
GRID CONNECTIONS AND BONDS ON GROUND GRID SHALL BE MADE BY CLAMPS DESIGNED FOR DIRECT BURIAL OR BY EXOTHERMIC WELDING TECHNIQUE.

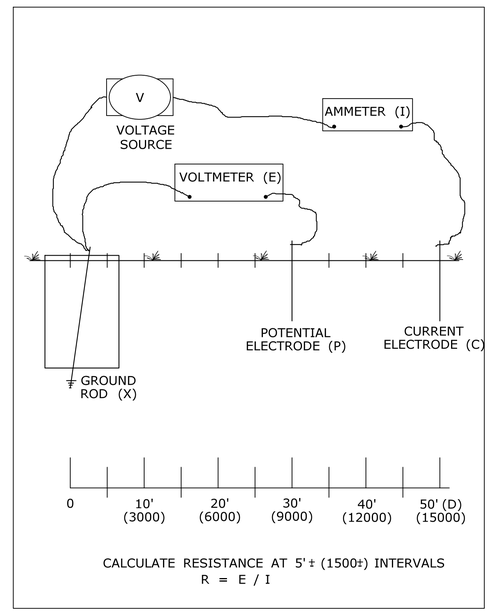

3 POINT GROUND RESISTANCE TEST CIRCUIT

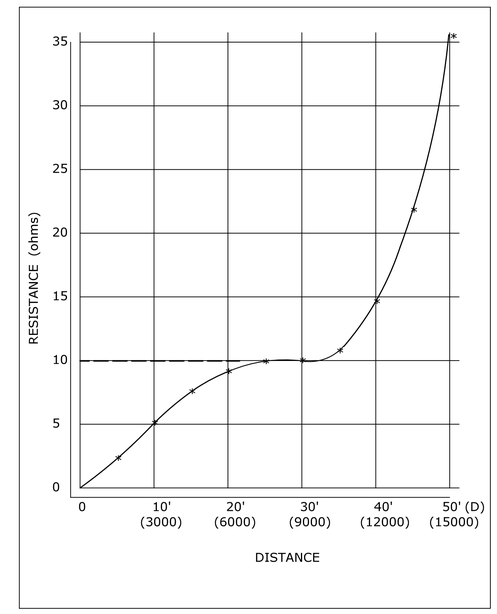

GROUND RESISTANCE CHART (EXAMPLE)

NOTES:

1. WHEN REQUESTED BY THE ENGINEER, MEASURE RESISTANCE-TO-GROUND OF GROUND ROD AT TRAFFIC CONTROL FOUNDATIONS. SEE FALL-OF-POTENTIAL METHOD. IF LESS THAN 10 ohms, INSTALL SUPPLEMENTAL ELECTRODES AS REQUIRED. NEC ARTICLE 250.
2. DURING THE TEST, THE GROUND ROD SHOULD NOT BE BONDED TO ANY RMC IN THE FOUNDATION.
3. THE VOLTAGE SOURCE, VOLTMETER, AMMETER, ELECTRODES P AND C, AND CONNECTING CABLES ARE AVAILABLE AS A SPECIALIZED TEST INSTRUMENT.
4. REFER TO NATIONAL ELECTRICAL SAFETY CODE (NESC) SECTION 09, GROUNDING METHODS FOR ELECTRIC SUPPLY AND COMMUNCATIONS FACILITIES.
5. REFER TO NATIONAL ELECTRICAL CODE (NEC) CHAPTER 2, ARTICLE 250, GROUNDING.

3 POINT FALL-OF-POTENTIAL GROUND RESISTANCE TEST

LEGEND AS SHOWN ON TRAFFIC CONTROL SIGNAL PLAN:
INDUCTIVE LOOP DETECTOR
SAW CUT
RIGID METAL CONDUIT
HANDHOLE

REV.	DATE	REVISION DESCRIPTION
2	1-2014	REVISED GROUND RESISTANCE NOTES.
1	4-2012	MINOR REVISIONS.

THE INFORMATION, INCLUDING ESTIMATED QUANTITIES OF WORK, SHOWN ON THESE SHEETS IS BASED ON LIMITED INVESTIGATIONS BY THE STATE AND IS IN NO WAY WARRANTED TO INDICATE THE CONDITIONS OF ACTUAL QUANTITIES OF WORK WHICH WILL BE REQUIRED.

Plotted Date: 1/7/2014

DIMENSIONS ARE IN ENGLISH ('.") & METRIC UNITS (mm).
METRIC DIMENSIONS ARE ROUNDED:
- OVER 1" TO NEAREST 5 mm
- UNDER 1" TO NEAREST 1 mm.

NOT TO SCALE

STATE OF CONNECTICUT
DEPARTMENT OF TRANSPORTATION

Filename: CTDOT_TRAFFIC_STD.DGN Model: TR-1000_01

SUBMITTED BY: NAME/DATE/TIME: Tracy L. Fogarty 2014.01.07 16:11:26-05'00'
APPROVED BY: NAME/DATE/TIME: Charles S. Harlow 2014.01.08 09:02:11-05'00'

CTDOT STANDARD SHEET
OFFICE OF ENGINEERING

STANDARD SHEET TITLE: GENERAL CLAUSES (TEST PROCEDURES)

STANDARD SHEET NO.: TR-1000_01

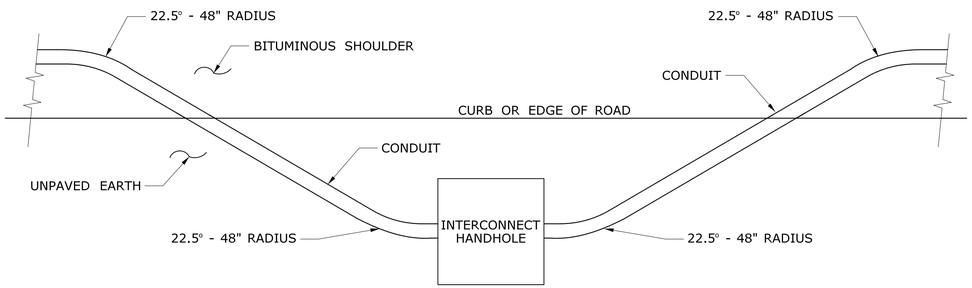

INTERCONNECT TYPICAL CURB CROSSING

NOTES:

1. RESTORE AREAS DISTURBED BY TRENCH TO ORIGINAL CONDITION.

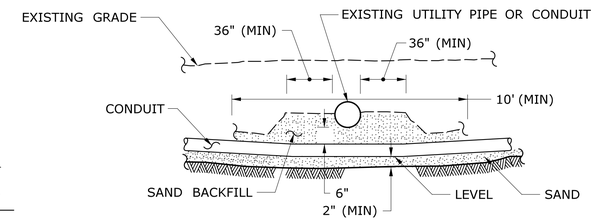

CROSSING UNDER EXISTING UTILITY

NOTES:

1. WHEN ENCOUNTERED AT APPROXIMATELY THE SAME DEPTH, CROSS BENEATH.
2. PROTECT & SUPPORT EXPOSED EXISTING UTILITY.

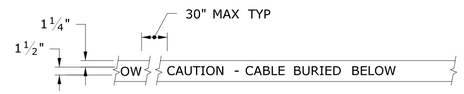

DETECTABLE WARNING TAPE

NOTE:

STANDARD SPECIFICATIONS, ARTICLE: 1.05.15

1. TAPE COLORS:
   COMMUNICATION - ORANGE BACKGROUND / BLACK LEGEND
   POWER - RED BACKGROUND / BLACK LEGEND

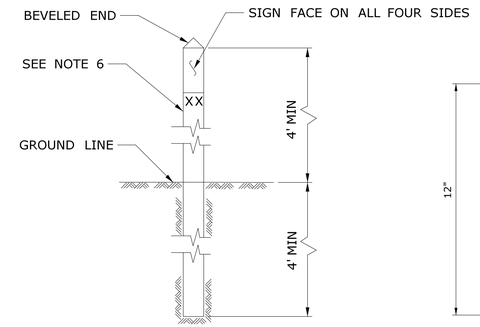

INTERCONNECT CONDUIT IDENTIFICATION POST

NOTES:

1. 4" x 4" NOMINAL, PRESSURE TREATED WOOD POST.
2. ATTACH SIGN TO POST WITH ¼" x 1¼" STAINLESS STEEL LAG SCREW WITH NYLON WASHER ON FACE OF SIGN.
3. SIGN COLORS: BACKGROUND - ORANGE (RETROREFLECTIVE)
   LEGEND - BLACK (OPAQUE).
4. INSTALL POST APPROX 24" FROM RMC IN VICINITY OF EACH INTERCONNECT HANDHOLE.
5. INSTALL ADDITIONAL POST(S) WHERE SPACING BETWEEN INTERCONNECT HANDHOLES IS GREATER THAN 1500' APART.
6. PERMANENTLY ATTACH STAINLESS STEEL NUMBERS INDICATING DISTANCE IN FEET TO TRENCH CONTAINING COMMUNICATION CABLE.
   ATTACH NUMBERS TO SIDE OF POST FACING CONDUIT.
7. IDENTIFICATION POSTS WITH SIGNS SHALL BE PAID UNDER THE COMMUNICATION CABLE ITEM.

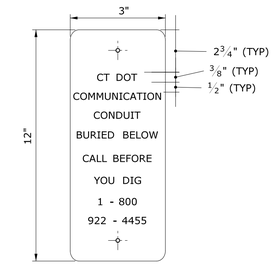

SIGN FACE DETAIL

SIGN # 41-4669

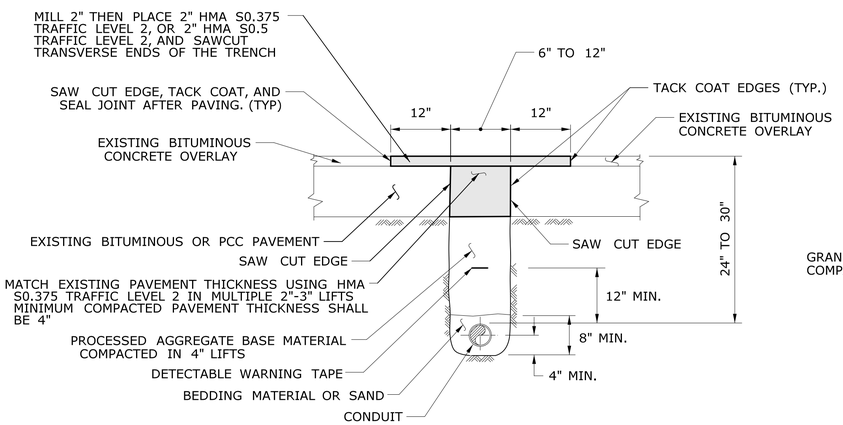

PAVEMENT - BITUMINOUS CONCRETE OR OVERLAYED PORTLAND CEMENT CONCRETE

NOTES:

STANDARD SPECIFICATION, SECTION 3.04 AND STANDARD SPECIFICATION, ARTICLE 4.06.03

1. TOTAL HOT MIX ASPHALT (HMA) THICKNESS TO MATCH EXISTING BITUMINOUS CONCRETE AND PORTLAND CEMENT CONCRETE (PCC) THICKNESS.
2. WHEN ALLOWED BY ENGINEER, USE CONTROLLED LOW STRENGTH MATERIAL (CLSM) AS BEDDING MATERIAL. TOP OF CLSM SHALL BE AT LEAST 20" BELOW SURFACE.

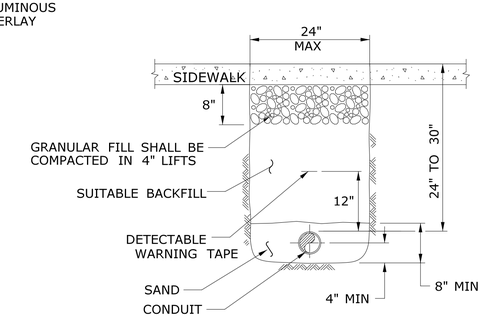

SIDEWALK

NOTES:

STANDARD SPECIFICATIONS, SECTIONS 9.21 & 9.22

1. WHERE CONCRETE SIDEWALK IS DAMAGED OR CUT, REPLACE THE ENTIRE SECTION BETWEEN JOINTS. REPLACEMENT SIDEWALK IS PAID FOR UNDER THE ITEM "CONCRETE SIDEWALK".

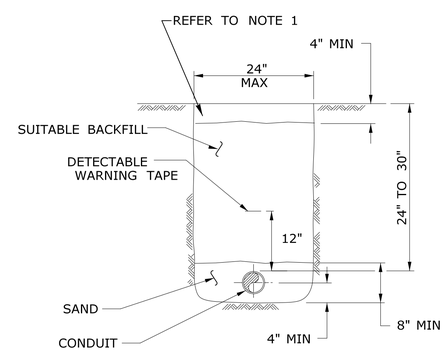

EARTH

NOTES:

STANDARD SPECIFICATIONS, SECTION 9.50 OR SEEDING TYPE CALLED OUT ON THE PLANS.

1. IN MOWED AREAS: PLACE TOPSOIL, FERTILIZER, SEED, & MULCH.

GENERAL NOTES:

1. TOP OF CONDUIT AT LEAST 24" DEEP.
2. COMPACT BACKFILL IN ≤6" LIFTS.
   HAND COMPACTION NOT PERMITTED.

LEGEND AS SHOWN ON TRAFFIC CONTROL SIGNAL PLAN:

– – – – PROPOSED RMC (RIGID METAL CONDUIT)

–•—•— EXISTING RMC (RIGID METAL CONDUIT)

	NOT TO SCALE	SIGNATURE BLOCK: OFFICE OF ENGINEERING 2800 BERLIN TURNPIKE NEWINGTON, CT 06111	SUBMITTED BY: Lisa N. Conroy, P.E. 2024.01.23 08:17:40-05'00'	APPOVED BY: Digitally signed by Matthew C. Blume, P.E., PTOE Date: 2024.02.21 08:26:47-05'00'	STATE OF CONNECTICUT DEPARTMENT OF TRANSPORTATION	CTDOT STANDARD SHEET	STANDARD SHEET TITLE: TRENCHING & BACKFILLING, ELECTRICAL CONDUIT	STANDARD SHEET NO.: TR-1001_01

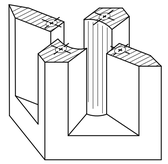

PICTORIAL
SECTION A-A

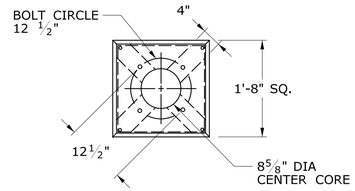

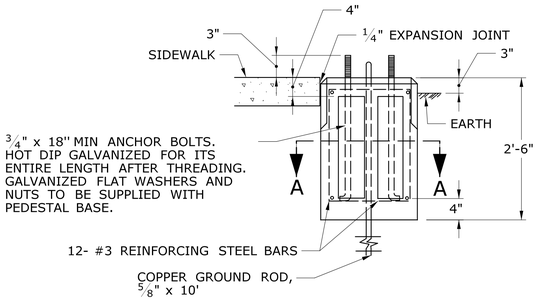

TRAFFIC CONTROL FOUNDATION
PEDESTAL - TYPE I - PRECAST

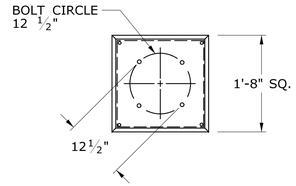

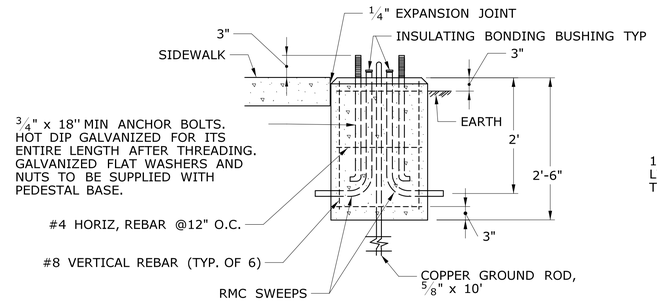

TRAFFIC CONTROL FOUNDATION
PEDESTAL - TYPE I - CAST IN PLACE

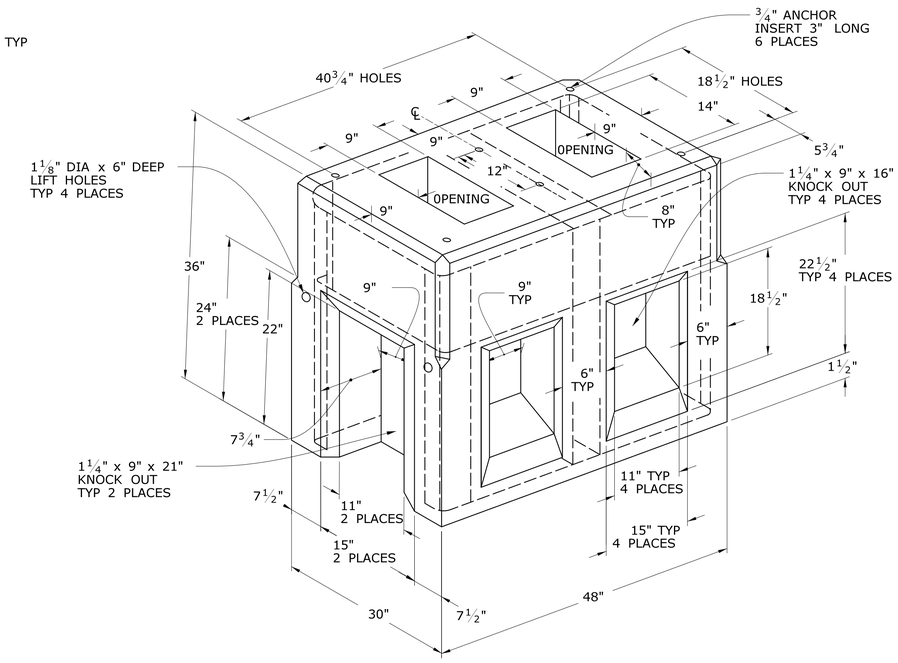

TRAFFIC CONTROL FOUNDATION
CONTROLLER - TYPE IV - PRECAST

TRAFFFIC CONTROL FOUNDATION PEDESTAL TYPE I NOTES:

INSTALL FOUNDATION ON 12" OF COMPACTED GRANULAR FILL IN ACCORDANCE WITH SECTION 2.13
LEVEL FOUNDATION WITH A PROJECTION OF 3" ABOVE FINISHED GRADE.
INSTALL COPPER GROUND ROD: 5/8" X 10'
PLACE NO. 6 CRUSHED STONE IN THE CENTER OPENINGS AFTER THE CONDUITS AND GROUND ROD HAVE BEEN INSTALLED.
CONDUITS SHALL NOT PROJECT MORE THAN 2" ABOVE FOUNDATION.
CONCRETE: (CAST-IN PLACE) PCC04460 IN ACCORDANCE WITH SECTION M.03
CONCRETE: (PRECAST) PRC04060 IN ACCORDANCE WITH ARTICLE M.14.01

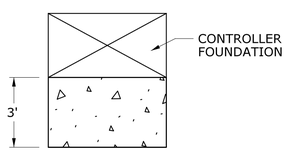

INSTALL PRECAST OR CAST IN PLACE CONCRETE SIDEWALK ON CABINET DOOR SIDE OF CONTROLLER FOUNDATION.
PITCH SIDEWALK 1/4" PER FOOT AWAY FROM THE CONTROLLER FOUNDATION.
REFER TO HIGHWAY STANDARD SHEET HW-921_01 FOR SIDEWALK CONSTRUCTION.

TYPICAL CONCRETE SIDEWALK
AT CONTROLLER FOUNDATION

NOT TO SCALE

TRAFFFIC CONTROL FOUNDATION CONTROLLER TYPE IV NOTES:

INSTALL FOUNDATION ON 12" OF COMPACTED GRANULAR FILL IN ACCORDANCE WITH SECTION 2.13
LEVEL FOUNDATION WITH A PROJECTION OF 4" ABOVE FINISHED GRADE.
INSTALL COPPER GROUND ROD: 5/8" x 10'
PLACE NO. 6 CRUSHED STONE IN THE CENTER OPENINGS AFTER THE CONDUITS AND GROUND ROD HAVE BEEN INSTALLED. THE OPENINGS SHALL BE CAPPED WITH A 2" GROUT LEVEL WITH THE TOP OF THE FOUNDATION AND NEATLY FINISHED. THE GROUT SHALL CONFORM WITH THE REQUIREMENTS OF ARTICLE M.03.05.
#4 REBAR 2" MIN COVER AROUND ALL OPENINGS, 3-#4 REBARS IN ALL CORNERS.
CONDUITS SHALL NOT PROJECT MORE THAN 2" ABOVE FOUNDATION.
CONCRETE: (PRECAST) PRC04060 IN ACCORDANCE WITH ARTICLE M.14.01

LEGEND AS SHOWN ON TRAFFIC CONTROL SIGNAL PLAN:
- PROPOSED CONTROLLER
- EXISTING CONTROLLER
- PEDESTAL MOUNTING

	NOT TO SCALE	SIGNATURE BLOCK: OFFICE OF ENGINEERING 2800 BERLIN TURNPIKE NEWINGTON, CT 06111	SUBMITTED BY: Lisa N. Conroy, P.E. 2024.01.23 08:18:30-05'00'	APPOVED BY: Digitally signed by Matthew C. Blume, P.E., PTOE Date: 2024.02.21 08:15:37-05'00'	STATE OF CONNECTICUT DEPARTMENT OF TRANSPORTATION	CTDOT STANDARD SHEET	STANDARD SHEET TITLE: TRAFFIC CONTROL FOUNDATIONS	STANDARD SHEET NO.: TR-1002_01

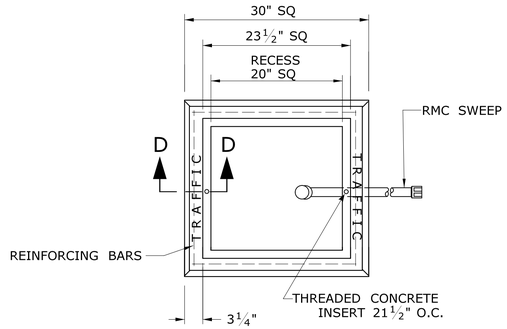

PLAN VIEW

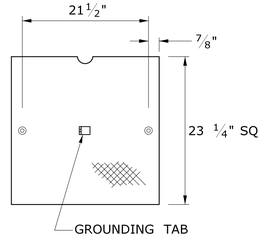

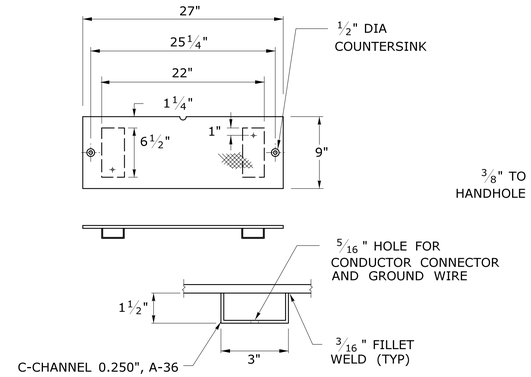

GALVANIZED, NON-SKID 3/8" FLOOR PLATE STEEL HANDHOLE COVERS

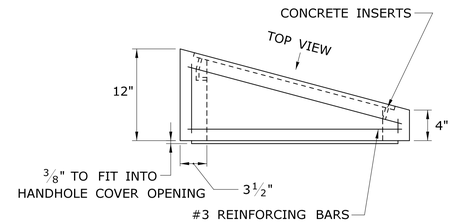

BANK ADAPTER

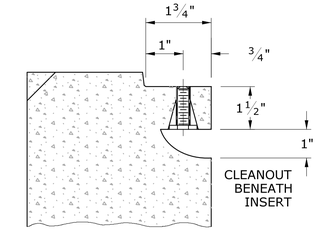

SECTION D-D

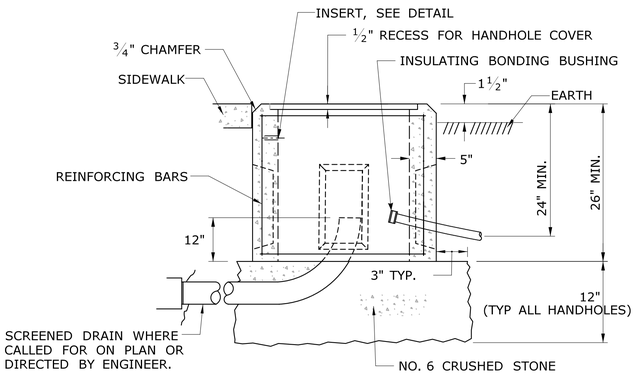

CONCRETE HANDHOLE TYPE I

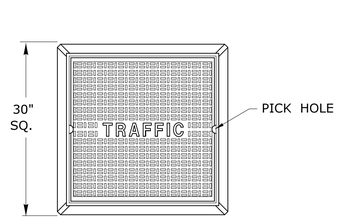

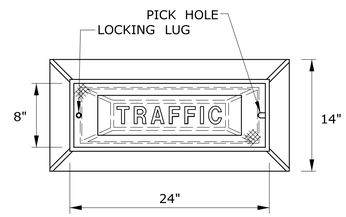

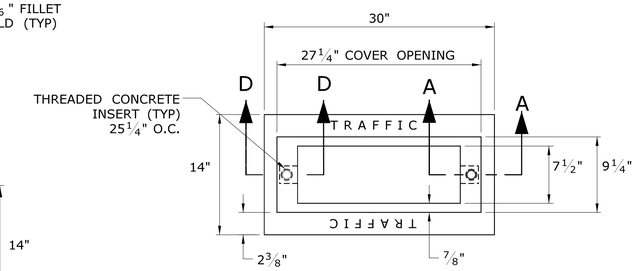

PLAN VIEW

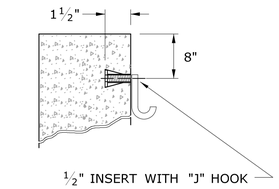

INSERT DETAIL

TYP IN TWO PLACES FOR ALL HANDHOLES

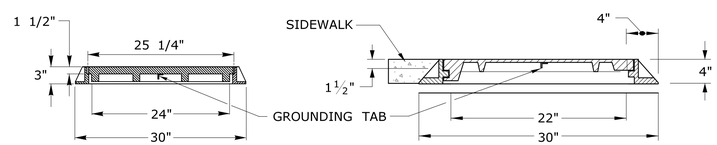

CAST IRON HANDHOLE COVERS

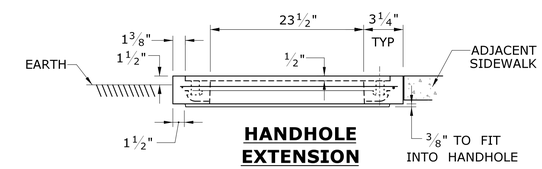

HANDHOLE EXTENSION

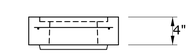

HANDHOLE EXTENSION

SIDE VIEW

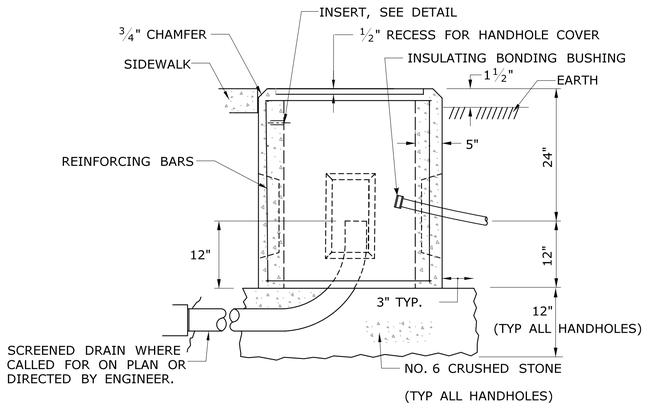

CONCRETE HANDHOLE TYPE I FOR SPLICING INTERCONNECT

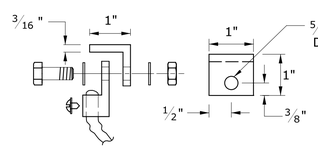

STEEL GROUNDING TAB w/ CONDUCTOR CONNECTOR

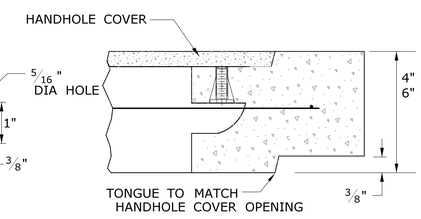

SECTION A-A HANDHOLE EXTENSIONS

4 - #8 REINFORCING BARS REQ'D

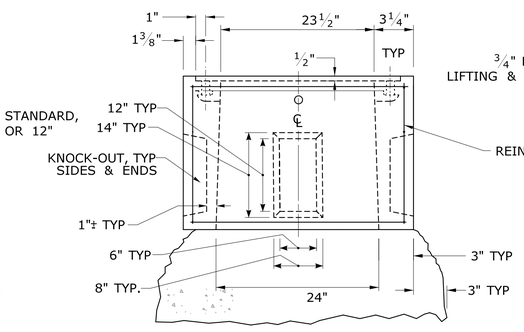

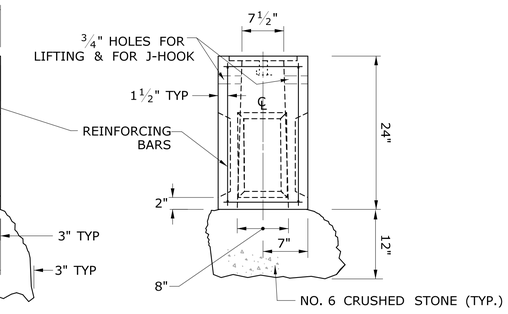

BASE SECTION

CONCRETE HANDHOLE TYPE II

COVER NOTES:

1. GROUNDING TAB WELDED TO BOTTOM CENTER OF COVER WITH 3/16" WELD (3 SIDES).
2. ATTACH 6' LENGTH OF NO. 8 GROUND WIRE TO GROUNDING TAB WITH CONDUCTOR CONNECTOR, ¼" - 20 X ¾" LG STAINLESS STEEL HEX HEAD BOLT, AND STAINLESS STEEL FLAT WASHER. ATTACH FREE END OF GROUND WIRE TO CONDUIT BONDING BUSHING IN HANDHOLE.
3. CONDUCTOR CONNECTOR: COPPER ALLOY BODY, BRASS SCREW, BRASS OR COPPER ALLOY PRESSURE PLATE.
4. COVER SCREW INSERT: ⅜"-16, 1½"L, STAINLESS STEEL.
5. COVER SCREW: ⅜"-16, 1"L, FLAT HEAD, SLOTTED, STAINLESS STEEL.

HANDHOLE NOTES:

1. CONCRETE: (PRECAST) PRC04060 IN ACCORDANCE WITH ARTICLE M.14.01
2. COMPLETE TYPE II HANDHOLE:
   IN EARTH AREAS, CONSISTS OF A BASE SECTION WITH HANDHOLE EXTENSION IF NEEDED, AND STEEL COVER.
   IN SIDEWALK AREAS, CONSISTS OF A BASE SECTION WITH HANDHOLE EXTENSION IF NEEDED, AND CAST IRON COVER PAID UNDER A SEPARATE ITEM.
3. PLAN VIEW DIMENSIONS, SECTION VIEW, & DETAILS, SAME FOR BASE SECTION, EXTENSIONS & BANK ADAPTER.
4. GROUT AROUND ALL CONDUITS.
5. INSTALL 30" SIDE PARALLEL TO ROAD UNLESS OTHERWISE NOTED.
6. INSTALL HANDHOLES APPROX. 12" BEHIND CURB OR IF NO CURB, 24" BEHIND EDGE OF ROAD UNLESS OTHERWISE SPECIFIED.
7. CAST THE WORD "TRAFFIC" INTO TOP EDGE OF HANDHOLE, 1½" LETTERS.
8. WHERE AN EXISTING CONCRETE SIDEWALK SLAB ABUTTING A HANDHOLE IS DAMAGED OR CUT DURING INSTALLATION, REPLACE THE ENTIRE SIDEWALK SECTION.
9. 12-#3 REINFORCING BARS REQUIRED FOR ALL HANDHOLES. (8 HORIZONTAL, 4 VERTICAL)
10. FOR TYPE I INTERCONNECT HANDHOLE 2" RMC ENTERING AND EXITING HANDHOLE MUST BE INSTALLED PERPENDICULAR TO THE SIDEWALL OF THE HANDHOLE.
11. CONTRACTOR SHALL BE RESPONSIBLE TO ENSURE THAT THE RADIUS OF THE INSTALLED RMC IS NOT GREATER THAN THE MINIMUM ALLOWED FOR FIBER OPTIC CABLE.

LEGEND AS SHOWN ON TRAFFIC CONTROL SIGNAL PLAN:

- PROPOSED HANDHOLE
- EXISTING HANDHOLE

NOT TO SCALE

SIGNATURE BLOCK:
OFFICE OF ENGINEERING
2800 BERLIN TURNPIKE
NEWINGTON, CT 06111

SUBMITTED BY:
Lisa N. Conroy, P.E.
2024.01.23
08:19:13-05'00'

APPOVED BY:
Digitally signed by Matthew C. Blume, P.E., PTOE
Date: 2024.02.21
08:26:02-05'00'

STATE OF CONNECTICUT
DEPARTMENT OF TRANSPORTATION

CTDOT STANDARD SHEET

STANDARD SHEET TITLE:
CONCRETE HANDHOLE

STANDARD SHEET NO.:
TR-1010_01

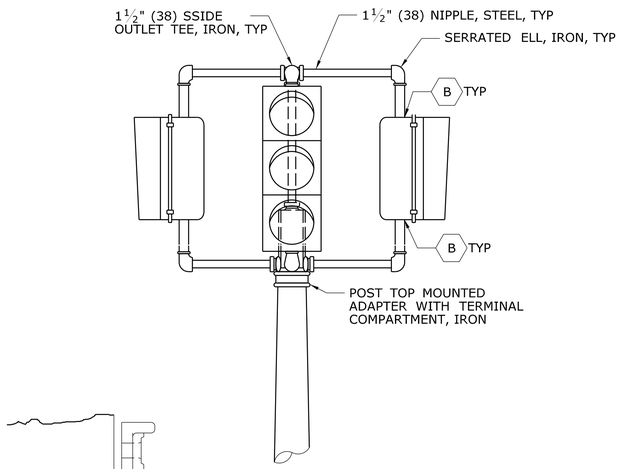

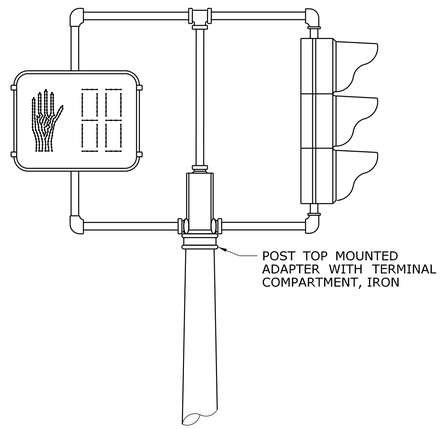

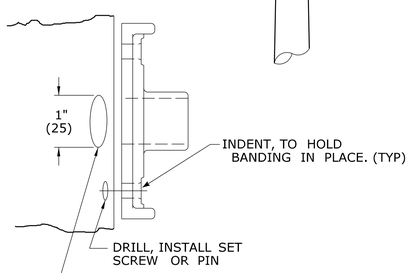

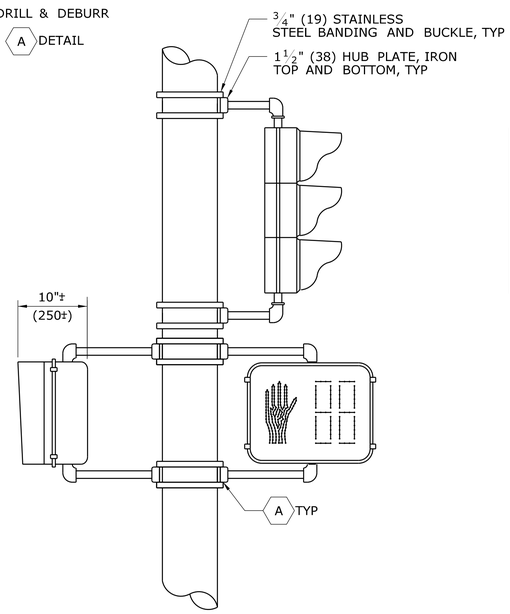

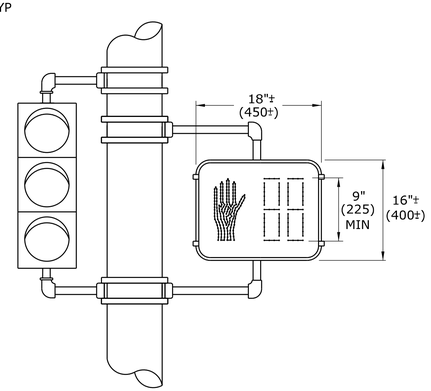

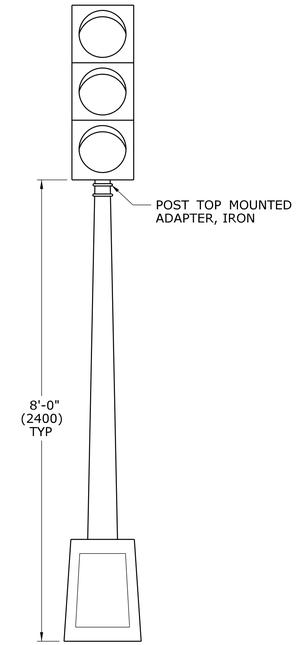

ONE WAY TRAFFIC SIGNAL PEDESTAL MOUNTED

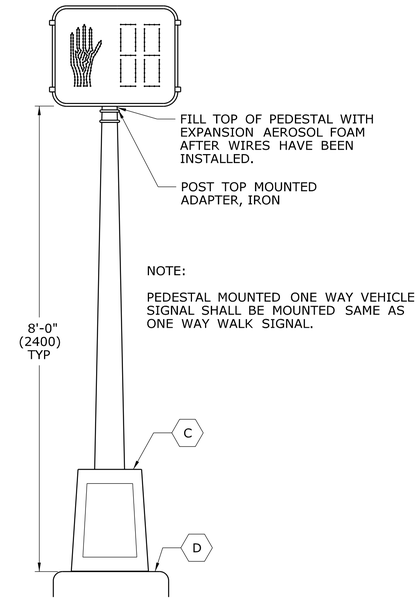

NOTE:

PEDESTAL MOUNTED ONE WAY VEHICLE SIGNAL SHALL BE MOUNTED SAME AS ONE WAY WALK SIGNAL.

ONE WAY WALK SIGNAL PEDESTAL MOUNTED

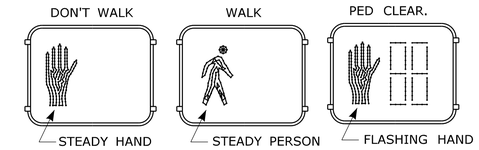

TYPICAL INDICATION WHEN LIT

NON-COUNTDOWN DISPLAY, ONLY WHEN SHOWN ON PLAN.

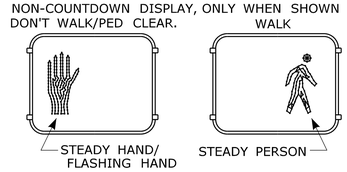

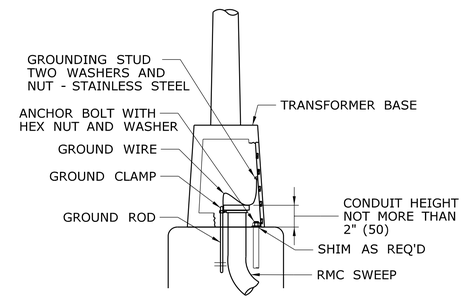

ALUMINUM PEDESTAL INSTALLATION DETAIL

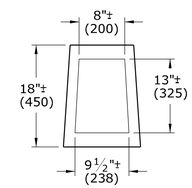

ALUMINUM PEDESTAL DOOR OPENING DETAIL

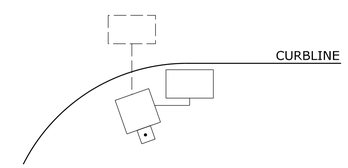

WHEN PEDESTALS OR SPAN POLES ARE INSTALLED CLOSE TO THE CURB, SIDE MOUNT PEDESTRIAN OR TRAFFIC SIGNALS TO AVOID VISOR DAMAGE FROM TURNING VEHICLES.

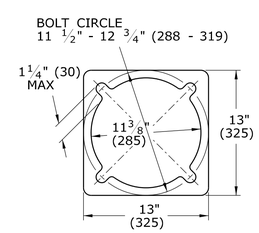

PEDESTAL BASE PLAN

ONE WAY TRAFFIC SIGNAL POLE MOUNTED

NOTES:

A. SECURE LOWER HUB PLATE WITH STAINLESS STEEL SET SCREW OR PIN PRIOR TO BANDING TO PREVENT MOVEMENT. INSTALL CABLE THROUGH BOTTOM OF HUB PLATE.

B. REFER TO CTDOT TRAFFIC STANDARD SHEET, TR-1105_01, TRAFFIC SIGNALS & CABLE ASSIGNMENTS.

C. IF THREADED, MIN 1" (25) THREADED INTO BASE, SECURED WITH STAINLESS STEEL SET SCREWS.

D. BASE DESIGNED AS BREAK-AWAY.

INCANDESCENT WALK SIGNAL LAMPS ARE 67 WATTS, RATED AT 8000 HOURS LAMP LIFE. LED WALK SIGNAL LAMPS ARE MAXIMUM 15 WATTS, WARRANTEED AT 5 YEAR LIFE.

LEGEND AS SHOWN ON TRAFFIC CONTROL SIGNAL PLAN:
- STEEL SPAN POLE, MAST ARM ASSEMBLY SHAFT
- ALUMINM PEDESTAL
- TRAFFIC SIGNAL
- PEDESTRIAN SIGNAL
- PEDESTAL MOUNTED, TRAFFIC & PEDESTRIAN SIGNALS
- POLE MOUNTED, TRAFFIC & PEDESTRIAN SIGNALS

REV.	DATE	REVISION DESCRIPTION
2	4-2012	MINOR REVISIONS.
1	1-2010	INCLUDED COUNTDOWN PEDESTRIAN SIGNALS.

THE INFORMATION, INCLUDING ESTIMATED QUANTITIES OF WORK, SHOWN ON THESE SHEETS IS BASED ON LIMITED INVESTIGATIONS BY THE STATE AND IS IN NO WAY WARRANTED TO INDICATE THE CONDITIONS OF ACTUAL QUANTITIES OF WORK WHICH WILL BE REQUIRED.

Plotted Date: 4/14/2012

DIMENSIONS ARE IN ENGLISH ("') & METRIC UNITS (mm). METRIC DIMENSIONS ARE ROUNDED: - OVER 1" TO NEAREST 5 mm - UNDER 1" TO NEAREST 1 mm.

NOT TO SCALE

STATE OF CONNECTICUT
DEPARTMENT OF TRANSPORTATION

Filename: CTDOT_TRAFFIC_STD.dgn Model: TR-1102_01

SUBMITTED BY: NAME/DATE/TIME: Tracy L. Fogarty 2012.05.01 12:55:27-04'00'

APPROVED BY: NAME/DATE/TIME: Timothy M. Wilson 2012.05.09 10:24:58-04'00'

CTDOT STANDARD SHEET

OFFICE OF ENGINEERING

STANDARD SHEET TITLE: PEDESTALS, PEDESTRIAN SIGNALS

STANDARD SHEET NO.: TR-1102_01

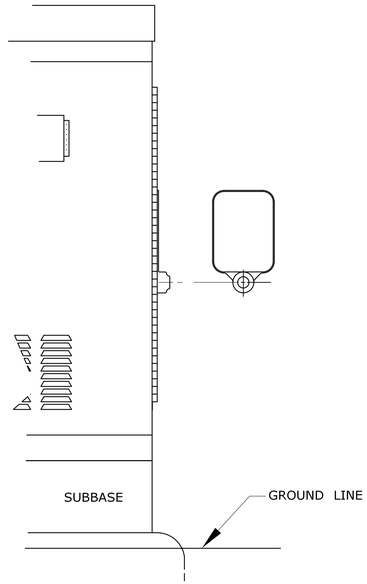

SURFACE MOUNTED

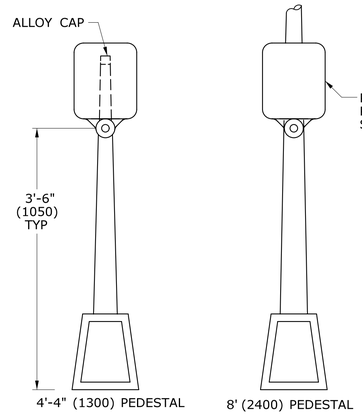

PEDESTAL MOUNTED

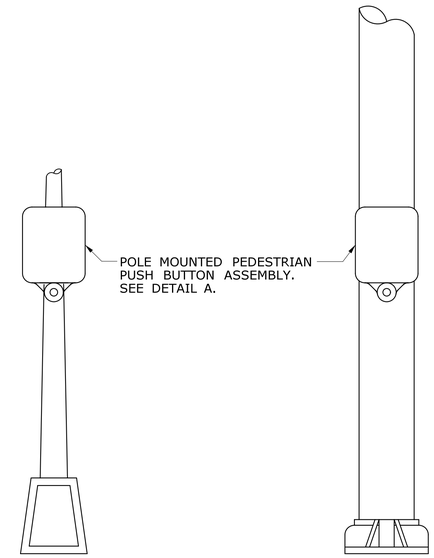

SPAN POLE/MAST ARM MOUNTED

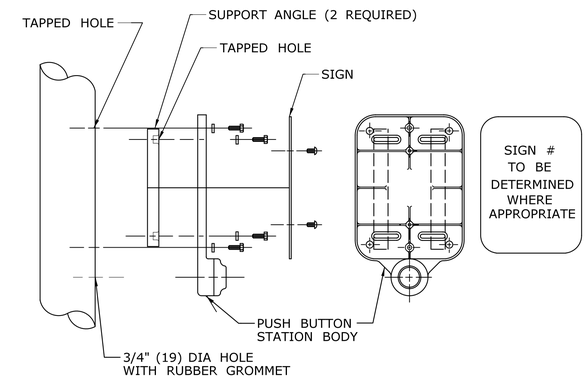

DETAIL A

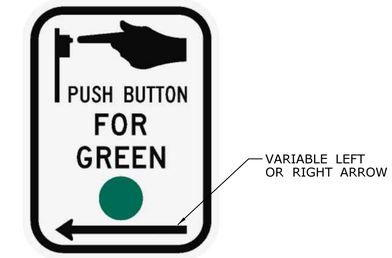

SIGN # 31-0833
USE APPROPRIATE LEFT OR RIGHT ARROW

SIGN # 31-0835

FOR CROSSING WITH SIDE STREET GREEN

GENERAL NOTES:

3'-6" (1050) FROM FINISHED GRADE SUCH AS SIDEWALK TO CENTER OF PUSH BUTTON.
PUSH BUTTON INSTALLATIONS SHALL CONFORM TO THE REQUIREMENTS OF THE AMERICANS WITH DISABILITIES ACT (ADA) STANDARDS FOR ACCESSIBLE DESIGN, CURRENT EDITION GOVERNS.
4'-4" (1300) PEDESTAL TO INCLUDE ALLOY CAP SECURED WITH STAINLESS STEEL SET SCREW.

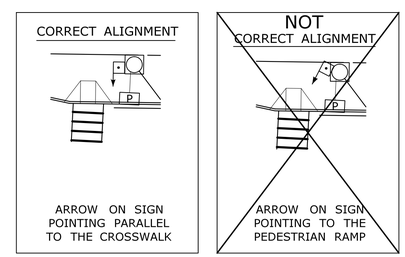

PEDESTRIAN PUSH BUTTON ALIGNMENT

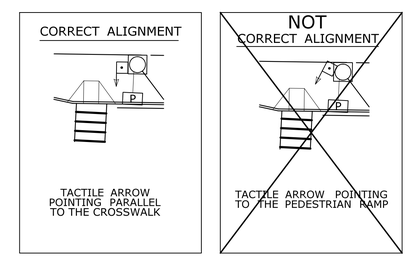

ACCESSIBLE PEDESTRIAN SIGNAL AND DETECTOR

EXAMPLE ALIGNMENTS FOR EXCLUSIVE PEDESTRIAN PHASE

* USE APPROPRIATE ARROW UNLESS OTHERWISE NOTED ON PLAN.

FOR NEW PUSHBUTTON HOUSING, USE 9" x 15" SIGN NO. 31-0856.

FOR EXISTING PUSHBUTTON HOUSING, WITH 9" x 12" SIZE, USE SIGN NO. 31-0845.

LEGEND AS SHOWN ON TRAFFIC CONTROL SIGNAL PLAN:
- PEDESTRIAN PUSH BUTTON
- PEDESTRIAN PUSH BUTTON, PEDESTAL MOUNTED
- PEDESTRIAN PUSH BUTTON, POLE MOUNTED

REV.	DATE	REVISION DESCRIPTION
3	8-2018	UPDATED PEDESTRIAN SIGN LEGENDS AND NOTES.
2	4-2014	ADDED PEDESTRIAN EXAMPLE ALIGNMENTS
1	4-2012	MINOR REVISIONS & UPDATED SIGN #31-0845.

THE INFORMATION, INCLUDING ESTIMATED QUANTITIES OF WORK, SHOWN ON THESE SHEETS IS BASED ON LIMITED INVESTIGATIONS BY THE STATE AND IS IN NO WAY WARRANTED TO INDICATE THE CONDITIONS OF ACTUAL QUANTITIES OF WORK WHICH WILL BE REQUIRED.

Plotted Date: 8/9/2018

DIMENSIONS ARE IN ENGLISH ('.') & METRIC UNITS (mm).
METRIC DIMENSIONS ARE ROUNDED:
- OVER 1" TO NEAREST 5 mm
- UNDER 1" TO NEAREST 1 mm.

NOT TO SCALE

STATE OF CONNECTICUT
DEPARTMENT OF TRANSPORTATION

Filename: CTDOT_TRAFFIC_STD_2018-01-25.dgn Model: TR-1107_01

SUBMITTED BY: NAME/DATE/TIME: Tracy L. Fogarty, P.E. 2018.08.16 12:13:35-04'00'

APPROVED BY: NAME/DATE/TIME: Mark F. Carlino, P.E. 2018.08.21 07:46:57-04'00'

CTDOT STANDARD SHEET

OFFICE OF ENGINEERING

STANDARD SHEET TITLE: **PEDESTRIAN PUSH BUTTONS**

STANDARD SHEET NO.: **TR-1107_01**

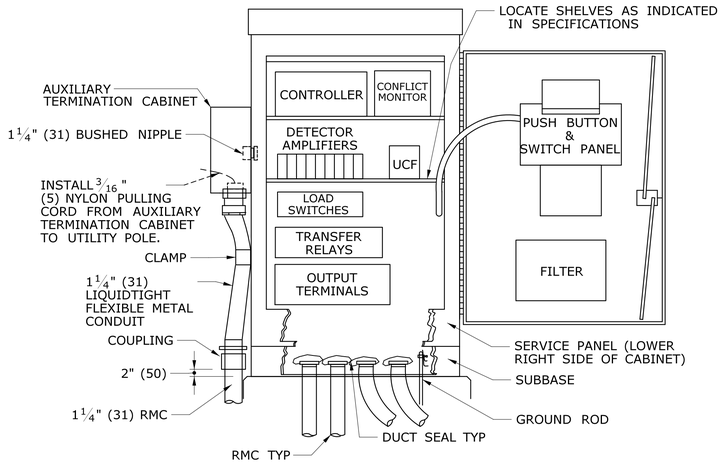

PROVIDE A MINIMUM CLEARANCE OF 6" (150) FROM THE CABINET BASE TO ALL COMPONENTS AND TERMINALS.

TYPICAL BASE MOUNTED CONTROLLER ON TYPE IV FOUNDATION

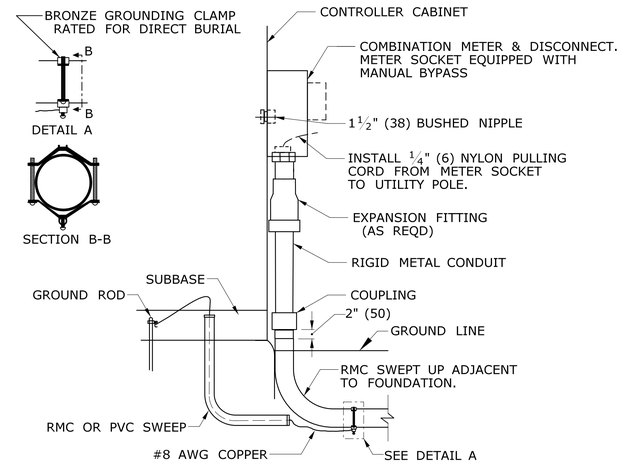

CONTROLLER CABINET WITH METERED SERVICE

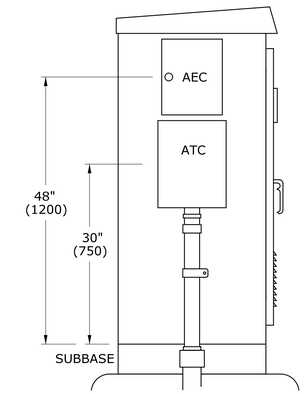

AUXILIARY EQUIPMENT CABINET (AEC) AUXILIARY TERMINATION CABINET (ATC)

CABINET TYPE	HEIGHT	WIDTH	DEPTH
ATC	16"(400)	12"(300)	6"(150)
AEC	14"(350)	11"(275)	11"(275)

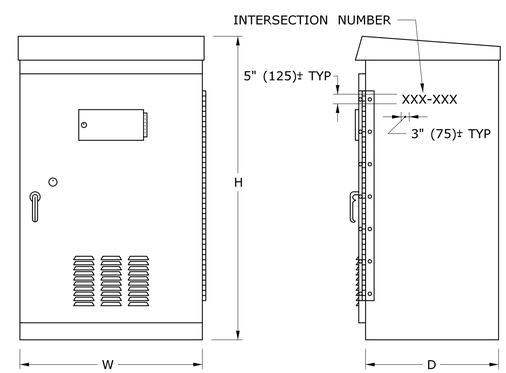

BASE MOUNTED TRAFFIC CONTROLLER (TYPE B, D & E)

CABINET TYPE	DEPTH		WIDTH		HEIGHT	
	MIN	MAX	MIN	MAX	MIN	MAX
B	17" (425)	19" (475)	30" (750)	34" (850)	52" (1300)	56" (1400)
D	25" (625)	27" (675)	42" (1050)	45" (1125)	54" (1350)	59" (1475)
E	17" (425)	19" (475)	30" (750)	32" (800)	49" (1225)	52" (1300)

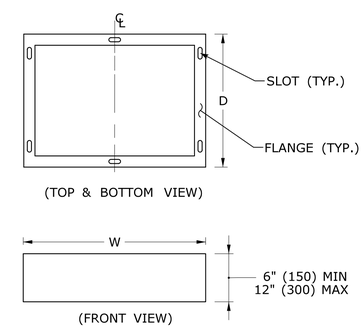

SUBBASE

SLOT AND FLANGE DIMENSIONS TO BE PER MANUFACTURER.

GENERAL NOTES:

GROUT ALL BASES AFTER MOUNTING ON FOUNDATIONS, WHERE NECESSARY.
3'-0" (900) FROM SIDEWALK TO BOTTOM OF CONTROLLER.
INSTALL PEDESTALS AND POLES SO THAT DOORS AND COVERS ARE ON THE SIDE AWAY FROM THE STREET, UNLESS OTHERWISE SPECIFIED.
INSTALL CABINET SO THAT DOOR OPENS FIELD SIDE UNLESS OTHERWISE NOTED ON PLANS.
CAULK SEAM BETWEEN SUBBASE AND FOUNDATION.
STENCIL SIX DIGIT INTERSECTION NUMBER, USING BLACK PAINT ON SIDE, FRONT OR BACK OF CABINET MOST VISIBLE FROM THE ROAD.

LEGEND AS SHOWN ON TRAFFIC CONTROL SIGNAL PLAN:
- CONTROLLER ASSEMBLY
- AUXILIARY EQUIPMENT CABINET
- AUXILIARY TERMINTION CABINET

REV.	DATE	REVISION DESCRIPTION
2	5-2013	REVISED SUBBASE.
1	4-2012	REVISED CABINET TYPES & MINOR REVISIONS.

THE INFORMATION, INCLUDING ESTIMATED QUANTITIES OF WORK, SHOWN ON THESE SHEETS IS BASED ON LIMITED INVESTIGATIONS BY THE STATE AND IS IN NO WAY WARRANTED TO INDICATE THE CONDITIONS OF ACTUAL QUANTITIES OF WORK WHICH WILL BE REQUIRED.

Plotted Date: 5/15/2013

DIMENSIONS ARE IN ENGLISH ('.') & METRIC UNITS (mm).
METRIC DIMENSIONS ARE ROUNDED:
- OVER 1" TO NEAREST 5 mm
- UNDER 1" TO NEAREST 1 mm.

NOT TO SCALE

STATE OF CONNECTICUT
DEPARTMENT OF TRANSPORTATION

Filename: CTDOT_TRAFFIC_STD.dgn Model: TR-1108_01

SUBMITTED BY: NAME/DATE/TIME: Tracy L. Fogarty 2013.07.29 14:04:24-04'00'
APPROVED BY: NAME/DATE/TIME: Charles S. Harlow 2013.07.29 14:59:45-04'00'

CTDOT STANDARD SHEET

OFFICE OF ENGINEERING

STANDARD SHEET TITLE: CONTROLLERS

STANDARD SHEET NO.: TR-1108_01

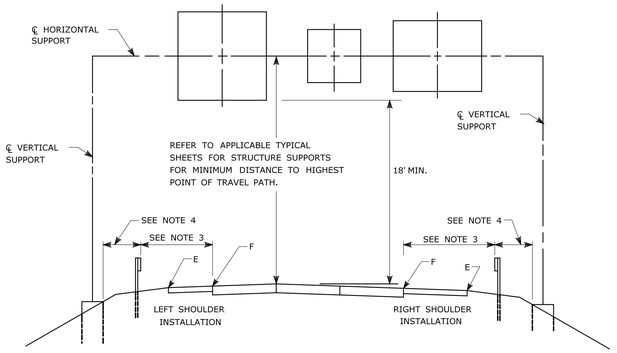

TYPICAL PLACEMENT OF OVERHEAD SIGNS ON SIGN SUPPORTS

NOTES:

1) FOR PLACEMENT OF CANTILEVER SIGN SUPPORT USE APPLICABLE PORTION OF ABOVE DETAIL.
2) BARRIER SYSTEMS MAY BE REQUIRED FOR BOTH SIDES OF SUPPORTS IN MEDIANS.
3) IMPACT PROTECTION SHALL BE PROVIDED FOR THE SIGN SUPPORTS LOCATED WITHIN CLEAR ZONE.
4) SIGN SUPPORT FOUNDATIONS SHALL BE LOCATED OUTSIDE OF BARRIER SYSTEMS DEFLECTION AREA.
5) ALL SIGNS ARE TO BE LEVEL, REGARDLESS OF CAMBER IN SUPPORT.

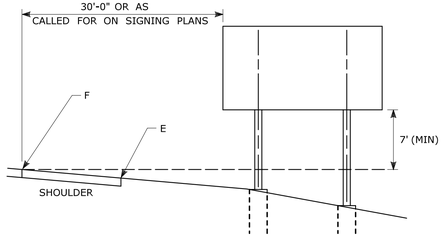

TYPICAL PLACEMENT OF SIDE MOUNTED SIGNS ON STRUCTURAL STEEL BREAKAWAY SIGN SUPPORTS

NOTES:

1) MIN. VERTICAL CLEARANCE ABOVE SIDEWALKS SHALL BE 7'.
2) WHERE GUIDE RAIL IS USED, THE OFFSET TO THE NEAR EDGE OF SIGN FACE SHALL BE AS SHOWN ELSEWHERE IN THE CONTRACT PLANS.
3) ON INTERSECTING ROADS AT RAMP TERMINI, THE OFFSET TO THE NEAR EDGE OF OF SIGN FACE SHALL BE 6' MIN. FROM POINT "E".
4) IF 30'-0" MIN. CANNOT BE MET, PLEASE CONTACT THE ENGINEER.

FOR MAXIMUM EFFECTIVENESS, POSITION SIDE MOUNTED SIGNS ON STRUCTURAL STEEL BREAKAWAY SIGN SUPPORTS AS FOLLOWS:

ON A TANGENT SECTION, POSITION THE SIGN SO THE VERTICAL AXIS IS PLUMB AND THE HORIZONTAL AXIS IS AT AN ANGLE OF 90° WITH THE TRAFFIC LANE WHICH THE SIGN SERVES. SIGNS LOCATED 30 FT OR MORE FROM THE EDGE OF THE ROAD SHALL BE TURNED APPROXIMATELY 3° TOWARD THE ROAD.

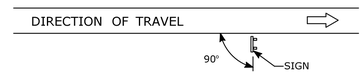

DIAGRAM "A"

ON A HORIZONTAL CURVE SECTION, POSITION THE SIGN SO THE VERTICAL AXIS IS PLUMB AND THE HORIZONTAL AXIS IS AT AN ANGLE OF 90° WITH A STRAIGHT LINE BETWEEN THE SIGN AND THE POINT AT WHICH THE SIGN SHALL BE READ.

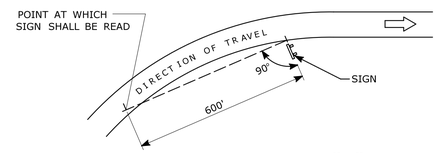

DIAGRAM "B"

SIGN ORIENTATION DETAILS FOR SIDE MOUNTED SIGNS ON STRUCTURAL STEEL BREAKAWAY SIGN SUPPORTS

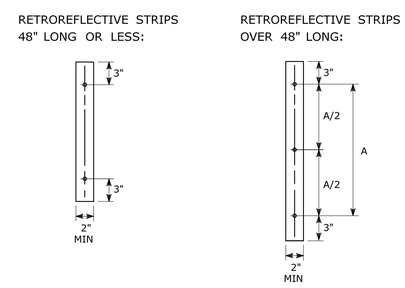

RETROREFLECTIVE STRIP DETAIL

NOTES:

RETROREFLECTIVE STRIPS WHICH ARE 48 IN LONG OR LESS SHALL BE ATTACHED USING 2 BOLTS AND RETROREFLECTIVE STRIPS OVER 48 IN LONG SHALL BE ATTACHED USING 3 BOLTS AS SHOWN ON THE DETAILS ABOVE.
REFER TO STANDARD SHEET No. TR-1208_02 "METAL SIGN POSTS AND SIGN MOUNTING DETAILS" FOR MOUNTING DETAILS.

RETROREFLECTIVE STRIP COLOR SHALL MATCH THE BACKGROUND COLOR OF THE SIGN, EXCEPT THAT THE COLOR OF THE STRIP FOR "YIELD" AND "DO NOT ENTER" SIGNS SHALL BE RED.

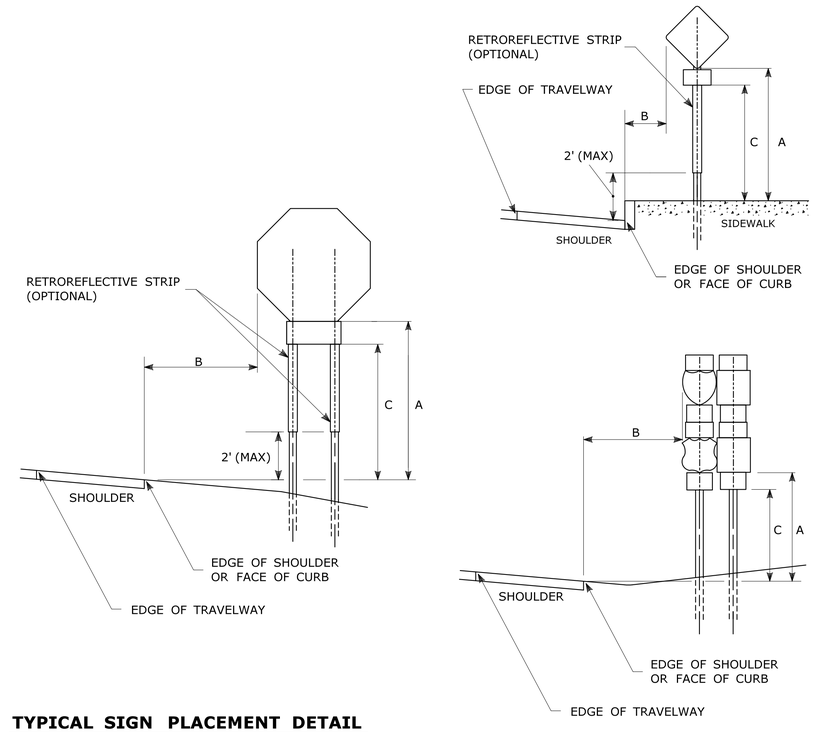

TYPICAL SIGN PLACEMENT DETAIL

NOTES:

ALL SIGNS AND SHIELDS ON DIRECTIONAL ASSEMBLIES SHALL ABUT VERTICALLY.

REFER TO STANDARD SHEET No. TR-1208_02 "METAL SIGN POSTS AND SIGN MOUNTING DETAILS" FOR SIGN POSTS AND SIGN MOUNTING.

IF A RETFOREFLECTIVE STRIP IS USED ON SIGN SUPPORT, IT SHALL BE PLACED FOR THE FULL LENGTH OF THE SUPPORT FROM THE BOTTOM OF THE SIGN TO WITHIN 2 FT ABOVE THE EDGE OF THE ROADWAY.

PARKING SIGNS TYPICALLY USE 45° MOUNTING BRACKET.

DIM."A" MIN SIGN HEIGHT	DIM."B" MIN LATERAL OFFSET (1)	DIM."C" MIN PLAQUE HEIGHT (1)	ASSEMBLY LOCATION
7' (2)	6' 12' (3)	5'	SIGNS ON FREEWAYS AND EXPRESSWAYS EXCEPT CHEVRON ALIGNMENT SIGNS, ONE-DIRECTION LARGE ARROW SIGNS, DO NOT ENTER SIGNS, AND WRONG WAY SIGNS
5'	2'	4'	• SIGNS IN RURAL AREAS • DO NOT ENTER AND WRONG WAY SIGNS ALONG EXIT RAMPS • DO NOT ENTER AND WRONG WAY SIGNS ON LIMITED ACCESS HIGHWAYS
5'	2'	N/A	• CHEVRON ALIGNMENT SIGNS LOCATED ON FREEWAYS, EXPRESSWAYS, RAMPS, AND IN RURAL AREAS • ONE-DIRECTION LARGE ARROW SIGNS LOCATED ON FREEWAYS, EXPRESSWAYS, RAMPS, AND IN RURAL AREAS
4'	6' 12' (3)	N/A	INCIDENT MANAGEMENT SIGNS AND MILE POST MARKER ASSEMBLIES LOCATED ON FREEWAYS AND EXPRESSWAYS
4'	2'	4'	CENTRAL ISLANDS OF ROUNDABOUTS
7'	2' (4)	6'	BUSINESS & RESIDENTIAL AREAS WHERE PARKING OR OTHER OBSTRUCTIONS LIMIT VISIBILITY
7'	2' (4)	7'	SIDEWALKS (5)

(1) OR AS DIRECTED BY THE ENGINEER

(2) 8 FT MINIMUM HEIGHT REQUIRED IF A SUPPLEMENTAL PLAQUE IS SUBMOUNTED BELOW THE MAJOR SIGN.

(3) 6 FT FROM EDGE OF SHOULDER, WHEN SHOULDER IS OVER 6 FT WIDE
12 FT FROM EDGE OF TRAVELWAY, WHEN SHOULDER IS LESS THAN 6 FT WIDE.

(4) A LATERAL OFFSET OF AT LEAST 1 FT FROM THE FACE OF THE CURB MAY BE USED WHERE SIDEWALK WIDTH IS LIMITED OR WHERE EXISTING UTILITY POLES ARE CLOSE TO THE CURB.

(5) A CLEAR PATH OF NOT LESS THAN 4 FT SHALL BE PROVIDED IN SIDEWALK AREAS.

REV.	DATE	REVISION DESCRIPTION
3	8-2018	INCLUDED INCIDENT MANAGEMENT AND MILE MARKER SIGNS.
2	4-2017	MINOR REVISIONS.
1	2-2011	MINOR REVISIONS.

THE INFORMATION, INCLUDING ESTIMATED QUANTITIES OF WORK, SHOWN ON THESE SHEETS IS BASED ON LIMITED INVESTIGATIONS BY THE STATE AND IS IN NO WAY WARRANTED TO INDICATE THE CONDITIONS OF ACTUAL QUANTITIES OF WORK WHICH WILL BE REQUIRED.

Plotted Date: 8/10/2018

NOT TO SCALE

STATE OF CONNECTICUT
DEPARTMENT OF TRANSPORTATION

Filename: TR_1208_01_1_2018.dgn Model: TR-1208_01

SUBMITTED BY: NAME/DATE/TIME: Mark F. Makuch, P.E. 2018.08.17 09:06:06-04'00'

APPROVED BY: NAME/DATE/TIME: Mark F. Carlino, P.E. 2018.08.21 07:48:06-04'00'

CTDOT STANDARD SHEET

OFFICE OF ENGINEERING

STANDARD SHEET TITLE:

SIGN PLACEMENT AND RETROREFLECTIVE STRIP DETAILS

STANDARD SHEET NO.: TR-1208_01

TYPICAL METAL SIGN POSTS

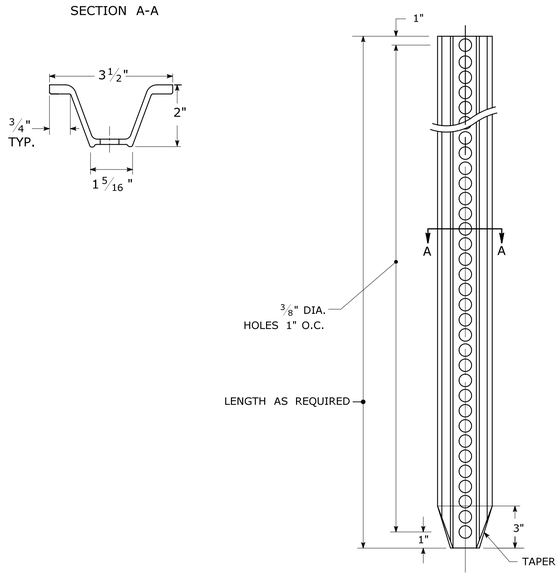

TYPICAL SIGN PANEL ATTACHMENT

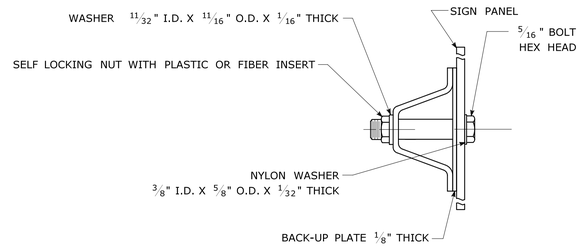

TYPICAL BACK TO BACK SIGN PANEL ATTACHMENT

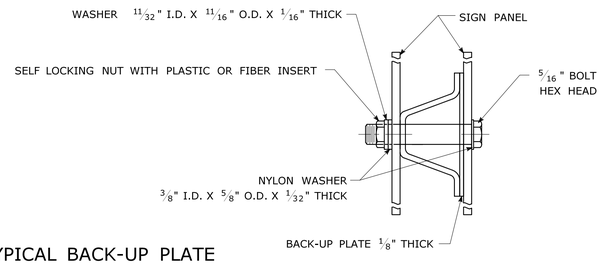

TYPICAL BACK-UP PLATE

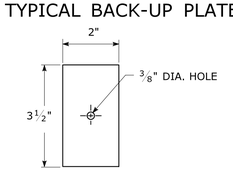

BOLTS - STAINLESS STEEL CONFORMING TO ASTM F593, ALLOY GROUP 1 OR 2 (ALLOY TYPES 304 OR 316).
SELF LOCKING NUTS - STAINLESS STEEL CONFORMING TO ASTM F594, ALLOY GROUP 1 OR 2 (ALLOY TYPES 304 OR 316).
WASHERS - STAINLESS STEEL CONFORMING TO ASTM A240, (ALLOY TYPES 304 OR 316).

METAL DELINEATOR POST

WT./FT. = 1.12 LBS./FT. MIN.

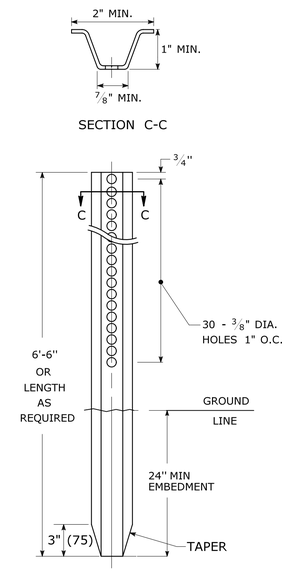

GENERAL NOTES:

1. STEEL FOR DELINEATOR POSTS SHALL BE ASTM A36 STEEL. STEEL FOR ALL OTHER POSTS SHALL CONFORM TO THE MECHANICAL REQUIREMENTS OF ASTM A 499 GRADE 80 AND TO THE CHEMICAL REQUIREMENTS OF ASTM A1 CARBON STEEL TEE RAIL HAVING NOMINAL WEIGHT (MASS) OF 91 LBS. OR GREATER PER LINEAR YARD.
2. AFTER FABRICATION, ALL STEEL POSTS, STRAPS AND PLATES SHALL BE GALVANIZED TO MEET THE REQUIREMENTS OF ASTM A123.
3. WASHERS FOR BREAKAWAY INSTALLATIONS SHALL MEET ASTM F436, TYPE 1.
4. SPACER BAR FOR BREAKAWAY INSTALLATION SHALL CONFORM TO THE MECHANICAL REQUIREMENTS OF ASTM A36.
5. ALL BOLTS, NUTS, AND WASHERS FOR BREAKAWAY INSTALLATIONS SHALL BE GALVANIZED TO MEET THE REQUIREMENTS OF ASTM A153.
6. ALL SIGN POSTS SHALL HAVE BREAKAWAY FEATURES THAT MEET AASHTO REQUIREMENTS CONTAINED IN THE CURRENT "STANDARD SPECIFICATIONS FOR STRUCTURAL SUPPORTS FOR HIGHWAY SIGNS, LUMINAIRES AND TRAFFIC SIGNALS." THE BREAKAWAY FEATURES SHALL BE STRUCTURALLY ADEQUATE TO CARRY THE SIGNS SHOWN IN THE PLANS AT 60 mph WIND LOADINGS. INSTALLATIONS SHALL BE IN ACCORDANCE WITH MANUFACTURERS RECOMMENDATIONS.
7. SIGN POSTS SHALL BE 4 LBS./FT.

BREAKAWAY INSTALLATION

FOR 4 LBS./FT. POSTS

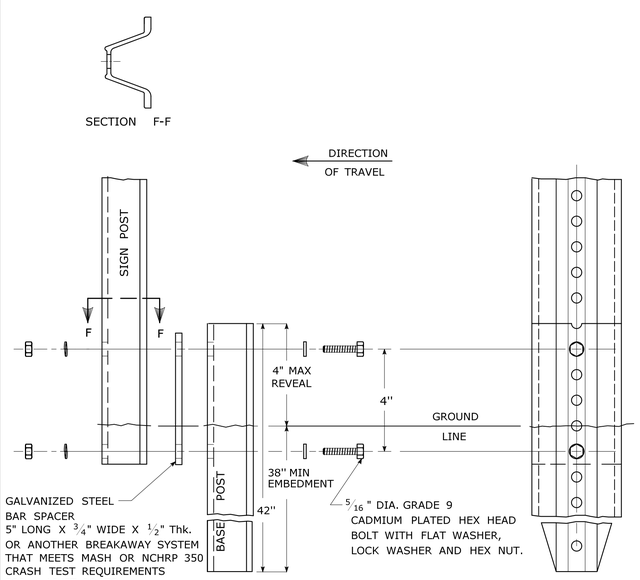

TYPICAL SIGN POST INSTALLATION IN LEDGE

LEDGE SHALL BE REMOVED TO DRIVE THE BASE POST TO A DEPTH OF 38".

HOLE SHALL BE FILLED WITH SUB-BASE MATERIAL AND COMPACTED WITH A TAMPING BAR, OR TECHNIQUE APPROVED BY THE ENGINEER, PRIOR TO BASE POST INSTALLATION.

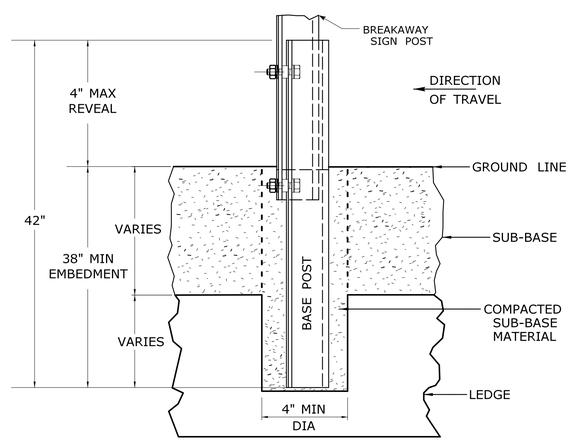

TYPICAL SLEEVE FOR PAVED AREAS

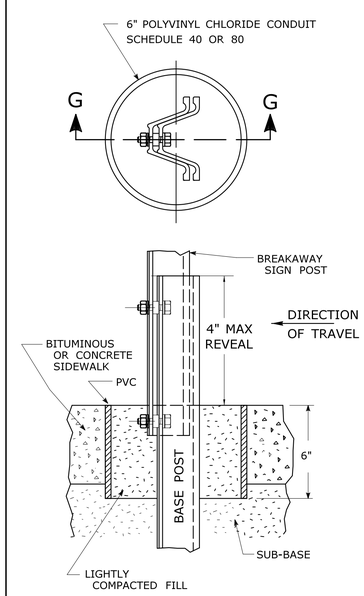

45° MOUNTING BRACKET FOR INSTALLATION OF PARKING SIGNS

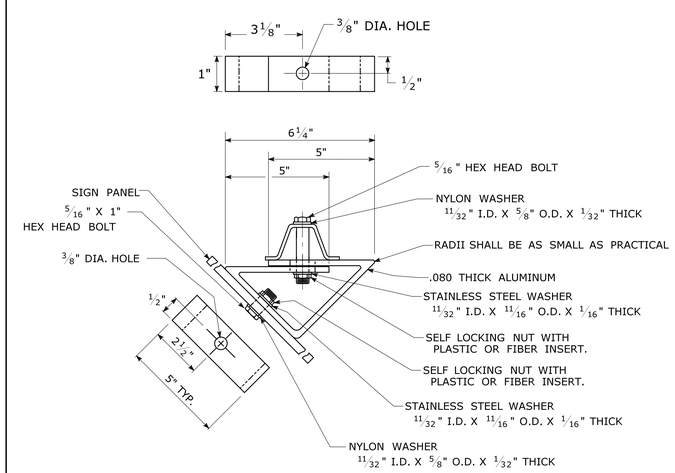

REV.	DATE	REVISION DESCRIPTION
2	6-2017	SIGN POST REVISIONS.
1	2-2011	MINOR REVISIONS.

THE INFORMATION, INCLUDING ESTIMATED QUANTITIES OF WORK, SHOWN ON THESE SHEETS IS BASED ON LIMITED INVESTIGATIONS BY THE STATE AND IS IN NO WAY WARRANTED TO INDICATE THE CONDITIONS OF ACTUAL QUANTITIES OF WORK WHICH WILL BE REQUIRED.

Plotted Date: 6/6/2017

NOT TO SCALE

STATE OF CONNECTICUT
DEPARTMENT OF TRANSPORTATION

Filename: TR-1208_02_May_2017_Revision.dgn Model: TR-1208_02

SUBMITTED BY: NAME/DATE/TIME:
Mark F. Makuch, P.E. 2017.06.07 07:30:30-04'00'
Mary E. Baker, P.E. 2017.06.13 15:28:14-04'00'
APPROVED BY: NAME/DATE/TIME:
Gregory M. Dorosh, P.E. 2017.06.15 09:27:29-04'00'

CTDOT STANDARD SHEET

OFFICE OF ENGINEERING

STANDARD SHEET TITLE:

METAL SIGN POSTS AND SIGN MOUNTING DETAILS

GUIDE SHEET NO.: TR-1208_02

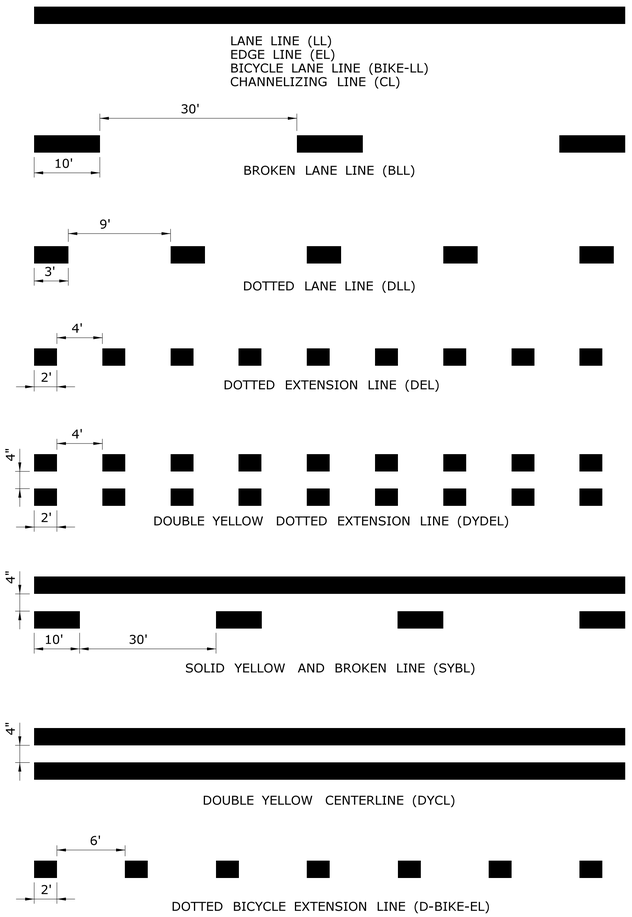

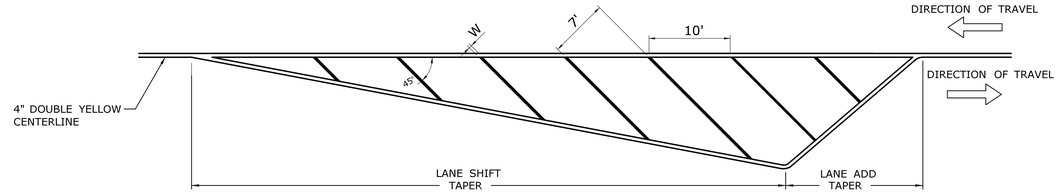

CROSS HATCHED ISLAND DETAIL
(YELLOW)

W IS TO BE 6" WHEN POSTED SPEED ≤ 45 MPH
W IS TO BE 12" WHEN POSTED SPEED > 45 MPH
CROSS HATCHED ISLANDS ARE TO BE INSTALLED WHERE CALLED FOR ON THE PLANS

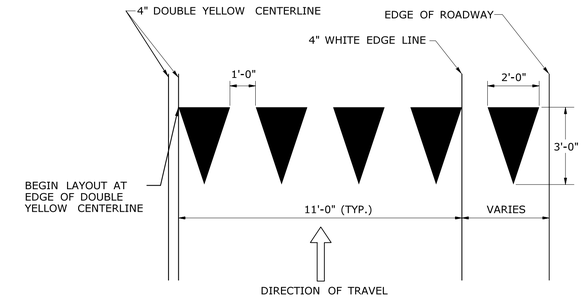

YIELD LINE DETAIL
(WHITE)

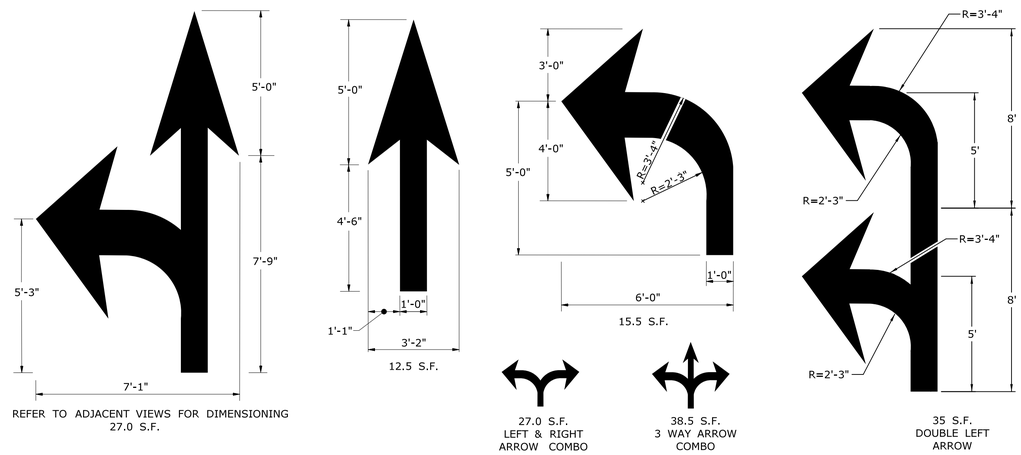

PAVEMENT ARROW DETAILS
(WHITE)
ARROWS SHALL BE CENTERED IN TRAVEL LANE

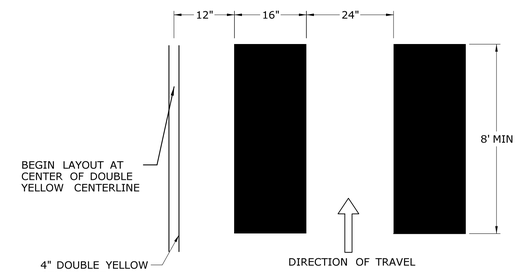

CROSSWALK DETAIL
(WHITE)

NOTES :

1. AREA OF PAVEMENT MARKINGS AS INDICATED IS APPROXIMATE.
2. RIGHT TURN PAVEMENT MARKING ARROWS ARE MIRROR IMAGE OF LEFT TURN PAVEMENT MARKING ARROWS.

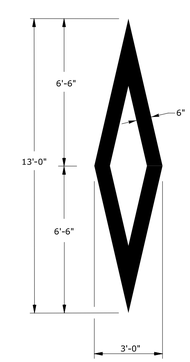

WHITE PREFERENTIAL LANE SYMBOL
13.0 S.F.

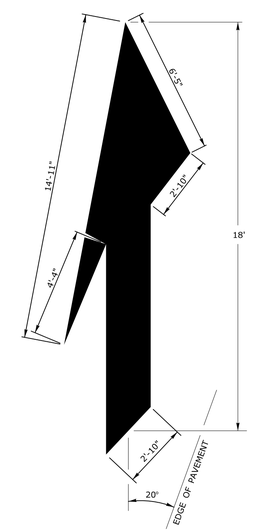

WHITE LANE REDUCTION ARROW
41.8 S.F.

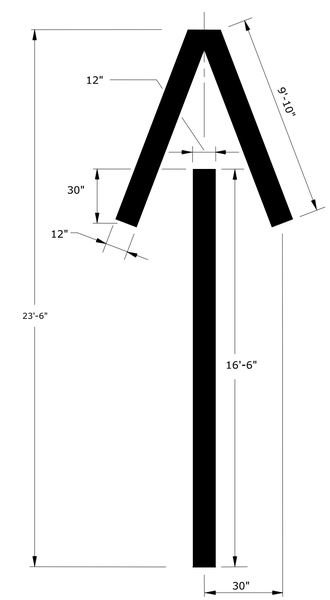

WHITE WRONG WAY PAVEMENT ARROW
36.2 S.F.

REV.	DATE	REVISION DESCRIPTION
1	8-2018	REMOVED ROUNDABOUT MARKINGS.

THE INFORMATION, INCLUDING ESTIMATED QUANTITIES OF WORK, SHOWN ON THESE SHEETS IS BASED ON LIMITED INVESTIGATIONS BY THE STATE AND IS IN NO WAY WARRANTED TO INDICATE THE CONDITIONS OF ACTUAL QUANTITIES OF WORK WHICH WILL BE REQUIRED.

Plotted Date: 8/10/2018

NOT TO SCALE

STATE OF CONNECTICUT
DEPARTMENT OF TRANSPORTATION

Filename: TR-1210_04.dgn Model: CT_Civil_2D_Sheet

SUBMITTED BY: NAME/DATE/TIME: Mark F. Makuch, P.E. 2018.08.17 09:07:44-04'00'

APPROVED BY: NAME/DATE/TIME: Mark F. Carlino, P.E. 2018.08.21 07:48:45-04'00'

CTDOT
STANDARD SHEET

OFFICE OF ENGINEERING

STANDARD SHEET TITLE:

PAVEMENT MARKING LINES AND SYMBOLS

STANDARD SHEET NO.:

TR-1210_04

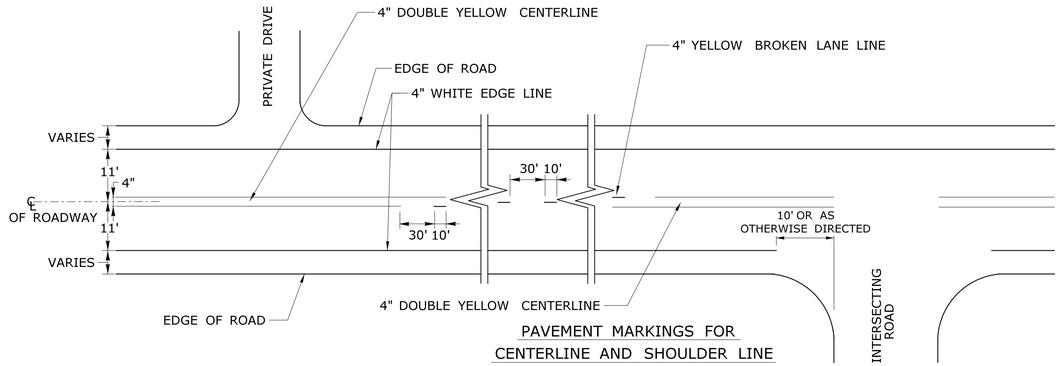

PAVEMENT MARKINGS FOR CENTERLINE AND SHOULDER LINE

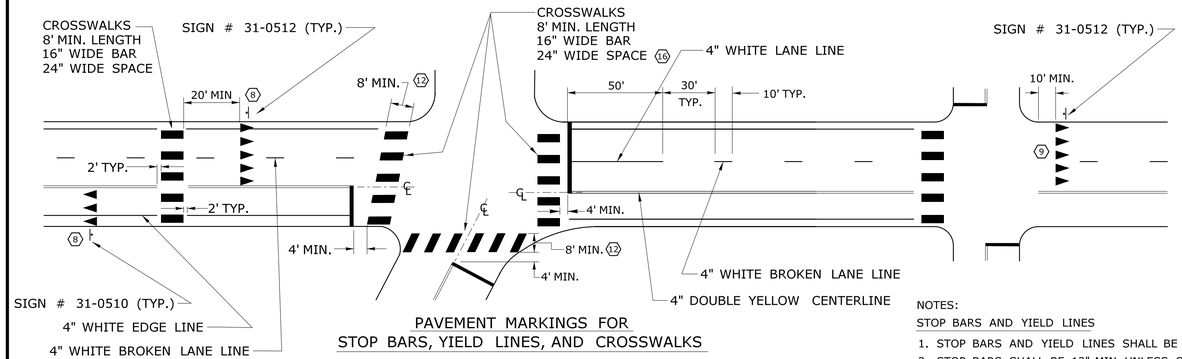

PAVEMENT MARKINGS FOR STOP BARS, YIELD LINES, AND CROSSWALKS

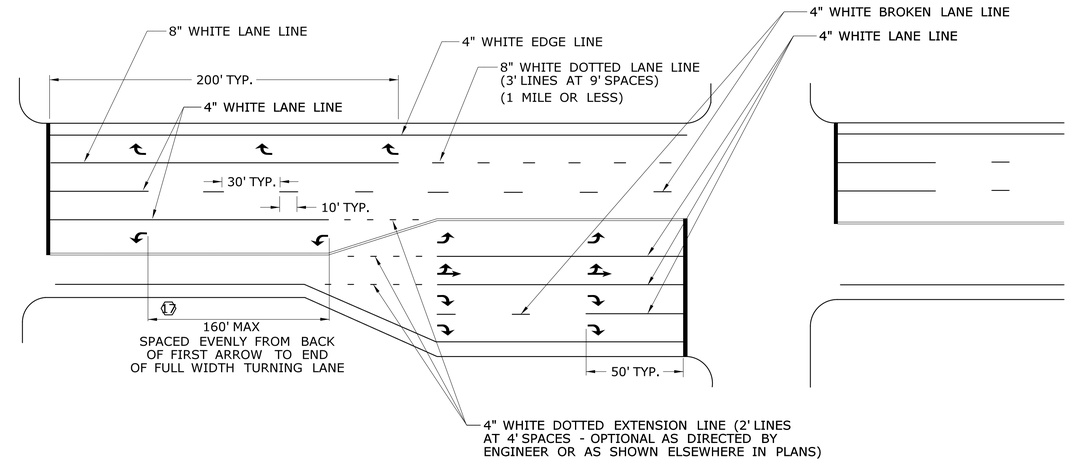

PAVEMENT MARKINGS FOR TURNING LANES AND ROAD LANE-DROP

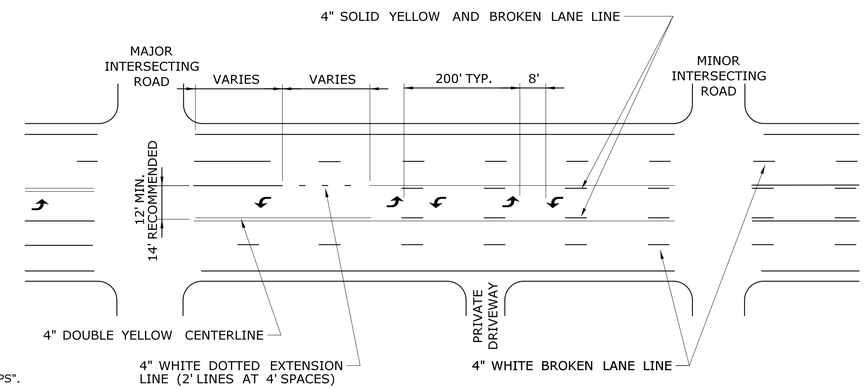

TWO-WAY LEFT-TURN MARKINGS APPLICATIONS

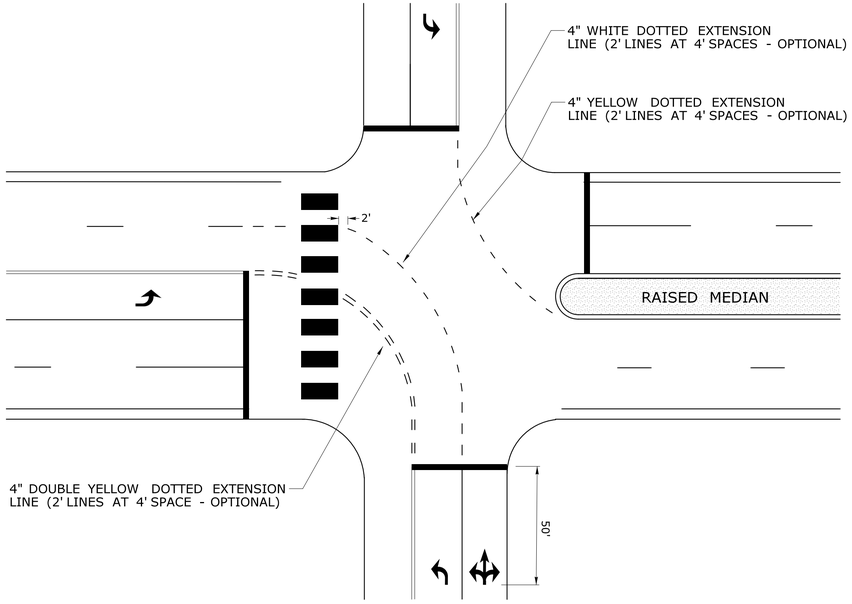

TURNING EXTENSIONS

NOTES:

STOP BARS AND YIELD LINES

1. STOP BARS AND YIELD LINES SHALL BE WHITE.
2. STOP BARS SHALL BE 12" MIN. UNLESS OTHERWISE NOTED ON PLANS.
3. STOP BARS TO BE PLACED A MINIMUM OF 4' IN ADVANCE OF THE NEAREST EDGE OF CROSSWALK AND SHOULD BE PLACED 90° TO THE CENTERLINE OF THE ROADWAY.
4. IN THE ABSENCE OF A MARKED CROSSWALK THE STOP BAR SHOULD BE PLACED 90° TO THE CENTERLINE OF THE ROADWAY, AT THE DESIRED STOPPING POINT AT LEAST 5' AND NO MORE THAN 30' FROM THE NEAREST EDGE OF THE INTERSECTING ROADWAY.
5. THE STOP SIGN SHOULD BE PLACED IN LINE WITH THE STOP BAR. HOWEVER, IF THE STOP SIGN CANNOT BE LOCATED EXACTLY WHERE VEHICLES ARE EXPECTED TO STOP, THE STOP BAR SHOULD BE PLACED AT THE STOPPING POINT.
6. FOR STOP BARS AT RAMPS SEE DETAILS "R", "S", "T", & "U" AND NOTES ON TRAFFIC STANDARD SHEET TR-1210 07 "PAVEMENT MARKINGS FOR DIVIDED HIGHWAYS EXIT RAMPS".
7. FOR YIELD LINE INSTALLATIONS, ONLY FULL TRIANGLES ARE TO BE INSTALLED.

(8) MID-BLOCK CROSSWALKS ARE CROSSWALKS LOCATED MORE THAN 50 FEET FROM A SIGNALIZED OR UNSIGNALIZED INTERSECTION. YIELD LINES ASSOCIATED WITH MIDBLOCK CROSSWALKS SHALL BE INSTALLED AND SHOULD BE LOCATED 20 TO 50 FEET IN ADVANCE OF THE NEAREST CROSSWALK LINE OR AS DIRECTED BY THE ENGINEER.
WHERE A YIELD LINE EXISTS ON AN APPROACH TO A CROSSWALK, THE APPROAPRIATE "YIELD TO PEDESTRIANS" SIGN IS REQUIRED.

(9) FOR CROSSWALKS AT UNSIGNALIZED INTERSECTIONS WITH MINOR STREET STOP CONTROL, YIELD LINES SHALL BE INSTALLED ON MULTI-LANE APPROACHES, BUT NOT SINGLE LANE APPROACHES.

10. THE YIELD SIGN SHOULD BE PLACED IN LINE WITH A YIELD LINE. HOWEVER, IF THE YIELD SIGN CANNOT BE LOCATED EXACTLY WHERE VEHICLES ARE EXPECTED TO YIELD, THE YIELD LINE SHOULD BE PLACED AT THE YIELDING POINT.

CROSSWALKS

11. CROSSWALK MARKINGS SHALL BE WHITE.

(12) AT LOCATIONS WHERE THE CROSSWALK IS SKEWED, BARS TO BE PARALLEL TO ℄ AND ENDS OF BARS TO BE PARALLEL. THE LENGTH OF THE BARS WILL VARY DEPENDING ON THE ANGLE OF SKEW.

13. BARS SHOULD BE NO CLOSER THAN 1' FROM EDGE OF ROAD.
14. ONLY FULL LENGTH BARS ARE TO BE INSTALLED.
15. DECORATIVE CROSSWALKS SHALL BE BANDED FROM CURB TO CURB WITH A MINIMUM 12" WIDE WHITE TRANSVERSE LINE ALONG EACH EDGE.

(16) 24" WIDE SPACE TO BE CENTERED ON YELLOW CENTERLINE.

PAVEMENT MARKINGS FOR TURNING LANES

(17) INSTALL AT LEAST TWO ARROWS PER LANE WHERE STORAGE LENGTH IS GREATER THAN 150 FEET.

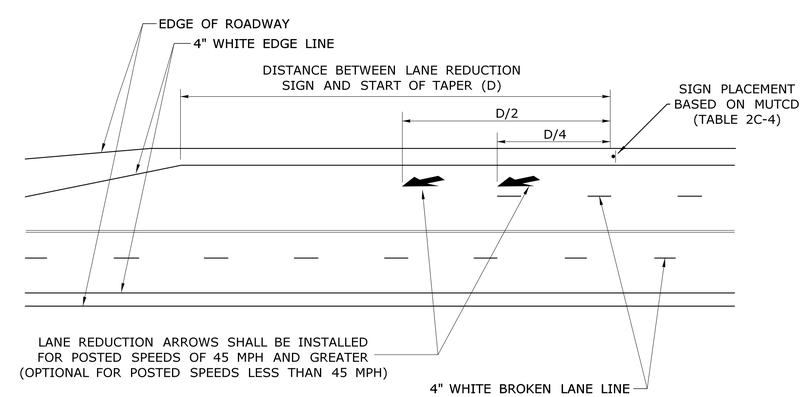

LANE REDUCTION TRANSITIONS

REV.	DATE	REVISION DESCRIPTION
1	8-2018	REVISED YIELD LINE SIGNAGE AND NOTES.

THE INFORMATION, INCLUDING ESTIMATED QUANTITIES OF WORK, SHOWN ON THESE SHEETS IS BASED ON LIMITED INVESTIGATIONS BY THE STATE AND IS IN NO WAY WARRANTED TO INDICATE THE CONDITIONS OF ACTUAL QUANTITIES OF WORK WHICH WILL BE REQUIRED.

Plotted Date: 8/10/2018

NOT TO SCALE

STATE OF CONNECTICUT
DEPARTMENT OF TRANSPORTATION

Filename: TR-1210_08.DGN Model: TR-1210_05

SUBMITTED BY: NAME/DATE/TIME: Mark F. Makuch, P.E. 2018.08.17 09:10:18-04'00'

APPROVED BY: NAME/DATE/TIME: Mark F. Carlino, P.E. 2018.08.21 07:49:18-04'00'

CTDOT STANDARD SHEET

OFFICE OF ENGINEERING

STANDARD SHEET TITLE:

PAVEMENT MARKINGS FOR NON FREEWAYS

STANDARD SHEET NO.:

TR-1210_08

E5 - SERIES

E5-1

EXIT

COPY & BORDER - WHITE
BACKGROUND - GREEN

AREA (SQ. FT)	SIZE (INCHES)	CONN. D.O.T. #	POSTS
16.0	48	51-6147	2

16 - SERIES

CONSTRUCTION AHEAD
ROAD USE RESTRICTED
STATE LIABILITY LIMITED
GENERAL STATUTES SEC 13a-115, 13a-145
COMMISSIONER OF TRANSPORTATION

	AREA (SQ. FT)	SIZE (INCHES)	CONN. D.O.T. #	POSTS
16-M	5.0	30X24	80-1613	1
16-H	17.5	60X42	80-1608	2
16-E	35.0	84X60	80-1605	2

CONSTRUCTION AHEAD
SIDEWALK USE RESTRICTED
STATE LIABILITY LIMITED
GENERAL STATUTES SEC 13a-115, 13a-145
COMMISSIONER OF TRANSPORTATION

AREA (SQ. FT)	SIZE (INCHES)	CONN. D.O.T. #	POSTS
16-S	10.0	48X30	80-1619	2

G20 - SERIES

G20-2a

END ROAD WORK

AREA (SQ. FT)	SIZE (INCHES)	CONN. D.O.T. #	POSTS
8.0	48X24	80-9612	2

ROAD WORK NEXT 0 MILE(S) BE PREPARED TO STOP

VARIABLE MILEAGE

AREA (SQ. FT)	SIZE (INCHES)	CONN. D.O.T. #	POSTS
90.0	120X108	80-9728	

WORK AREA BE PREPARED TO STOP

AREA (SQ. FT)	SIZE (INCHES)	CONN. D.O.T. #	POSTS
9.0	36	80-9711	1
16.0	48	80-9712	2

NEXT 0 MILES

VARIABLE MILEAGE

AREA (SQ. FT)	SIZE (INCHES)	CONN. D.O.T. #	POSTS
7.0	72X14	80-9720	

BUSINESS ACCESS

VARIABLE ARROW
COPY & BORDER - WHITE
BACKGROUND - BLUE

AREA (SQ. FT)	SIZE (INCHES)	CONN. D.O.T. #	POSTS
9.0	36	50-5934	2

M4 - SERIES

M4-8

DETOUR

AREA (SQ. FT)	SIZE (INCHES)	CONN. D.O.T. #	POSTS
2.0	24X12	80-9707	1

M4-9b

DETOUR

VARIABLE ARROW

AREA (SQ. FT)	SIZE (INCHES)	CONN. D.O.T. #	POSTS
5.0	30X24	80-9703	1

M4-8a

END DETOUR

AREA (SQ. FT)	SIZE (INCHES)	CONN. D.O.T. #	POSTS
3.0	24X18	80-9708	1

M4-9b

DETOUR

VARIABLE ARROW

AREA (SQ. FT)	SIZE (INCHES)	CONN. D.O.T. #	POSTS
6.25	30X30	80-9706	1

M4-10

(R) DETOUR
(L) DETOUR

AREA (SQ. FT)	SIZE (INCHES)	CONN. D.O.T. #	POSTS
6.0	48X18	80-9701R	2
6.0	48X18	80-9702L	2

DETOUR

VARIABLE ARROW

AREA (SQ. FT)	SIZE (INCHES)	CONN. D.O.T. #	POSTS
5.0	30X24	80-9710	1

R1 - SERIES

R1-1

STOP

COPY & BORDER - WHITE
BACKGROUND - RED

AREA (SQ. FT)	SIZE (INCHES)	CONN. D.O.T. #	POSTS
5.19	30	31-0552	1
13.30	48	31-0557	2

R1-2

YIELD

COPY & BORDER - RED
BACKGROUND - WHITE

AREA (SQ. FT)	SIZE (INCHES)	CONN. D.O.T. #	POSTS
3.90	36	31-0523	1
10.83	60	31-0528	2

R4 - SERIES

R4-7

COPY & BORDER - BLACK
BACKGROUND - WHITE

AREA (SQ. FT)	SIZE (INCHES)	CONN. D.O.T. #	POSTS
5.0	24X30	31-1526	1

R4-9

STAY IN LANE

COPY & BORDER - BLACK
BACKGROUND - WHITE

AREA (SQ. FT)	SIZE (INCHES)	CONN. D.O.T. #	POSTS
5.0	24X30	31-1517	1
12.0	36X48	31-1518	1
20.0	48X60	31-1519	2

R9 & R11 - SERIES

R9-9

SIDEWALK CLOSED

COPY & BORDER - BLACK
BACKGROUND - WHITE

AREA (SQ. FT)	SIZE (INCHES)	CONN. D.O.T. #	POSTS
3.75	30X18	80-9076	1

R11-3a

ROAD CLOSED
00 MILES AHEAD
LOCAL TRAFFIC ONLY

VARIABLE MILEAGE
COPY & BORDER - BLACK
BACKGROUND - WHITE

AREA (SQ. FT)	SIZE (INCHES)	CONN. D.O.T. #	POSTS
12.5	60X30	80-9077	2

R9-11

SIDEWALK CLOSED AHEAD
CROSS HERE

VARIABLE ARROW
COPY & BORDER - BLACK
BACKGROUND - WHITE

AREA (SQ. FT)	SIZE (INCHES)	CONN. D.O.T. #	POSTS
3.0	24X18	80-9074	1

R11-3b

BRIDGE CLOSED
00 MILES AHEAD
LOCAL TRAFFIC ONLY

VARIABLE MILEAGE
COPY & BORDER - BLACK
BACKGROUND - WHITE

AREA (SQ. FT)	SIZE (INCHES)	CONN. D.O.T. #	POSTS
12.5	60X30	80-9078	2

R9-11a

SIDEWALK CLOSED
CROSS HERE

VARIABLE ARROW
COPY & BORDER - BLACK
BACKGROUND - WHITE

AREA (SQ. FT)	SIZE (INCHES)	CONN. D.O.T. #	POSTS
2.0	24X12	80-9075	1

R11-3b

ROAD CLOSED TO THRU TRAFFIC

COPY & BORDER - BLACK
BACKGROUND - WHITE

AREA (SQ. FT)	SIZE (INCHES)	CONN. D.O.T. #	POSTS
12.5	60X30	80-9081	2

R11-2

ROAD CLOSED

COPY & BORDER - BLACK
BACKGROUND - WHITE

AREA (SQ. FT)	SIZE (INCHES)	CONN. D.O.T. #	POSTS
10.0	48X30	80-9080	2

ROAD WORK AHEAD
FINES DOUBLED

COPY & BORDER - BLACK
BACKGROUND - WHITE

AREA (SQ. FT)	SIZE (INCHES)	CONN. D.O.T. #	POSTS
14.0	48X42	31-1906	2
22.5	60X54	31-1907	2

W1 - SERIES

W1-4

(L) (R)

AREA (SQ. FT)	SIZE (INCHES)	CONN. D.O.T. #	POSTS
9.0	36	80-9432L	1
9.0	36	80-9431R	1
16.0	48	80-9452L	2
16.0	48	80-9451R	2

W1-6

(L or R)

AREA (SQ. FT)	SIZE (INCHES)	CONN. D.O.T. #	POSTS
8.0	48X24	80-9424	2
12.5	60X30	80-9423	2

W1-8

AREA (SQ. FT)	SIZE (INCHES)	CONN. D.O.T. #	POSTS
3.0	18X24	80-9401	1
5.0	24X30	80-9403	1
7.5	30X36	80-9404	1

BOTH LANES SHIFT LEFT AHEAD (L)
BOTH LANES SHIFT RIGHT AHEAD (R)

AREA (SQ. FT)	SIZE (INCHES)	CONN. D.O.T. #	POSTS
16.0	48	80-9433L	2
16.0	48	80-9435R	2

AHEAD (L) AHEAD (R)

AREA (SQ. FT)	SIZE (INCHES)	CONN. D.O.T. #	POSTS
25.0	60	80-9483L	2
25.0	60	80-9485R	2

BOTH LANES SHIFT LEFT (L)
BOTH LANES SHIFT RIGHT (R)

AREA (SQ. FT)	SIZE (INCHES)	CONN. D.O.T. #	POSTS
16.0	48	80-9434L	2
16.0	48	80-9436R	2

W1-4c

(L) (R)

AREA (SQ. FT)	SIZE (INCHES)	CONN. D.O.T. #	POSTS
25.0	60	80-9484L	2
25.0	60	80-9486R	2

AHEAD (L) AHEAD (R)

AREA (SQ. FT)	SIZE (INCHES)	CONN. D.O.T. #	POSTS
25.0	60	80-9443L	2
25.0	60	80-9445R	2

W1-4b

(L) (R)

AREA (SQ. FT)	SIZE (INCHES)	CONN. D.O.T. #	POSTS
25.0	60	80-9444L	2
25.0	60	80-9446R	2

W3 - SERIES

W3-1

OCTAGON - RED W/ WHITE BORDER
ARROW & BORDER - BLACK
BACKGROUND - FLUORESCENT ORANGE

AREA (SQ. FT)	SIZE (INCHES)	CONN. D.O.T. #	POSTS
9.0	36	80-9050	1
16.0	48	80-9051	2

W3-2

TRIANGLE - RED W/ WHITE BORDER
ARROW & BORDER - BLACK
BACKGROUND - FLUORESCENT ORANGE

AREA (SQ. FT)	SIZE (INCHES)	CONN. D.O.T. #	POSTS
9.0	36	80-9054	1
16.0	48	80-9055	2

W3-3

TOP CIRCLE - RED
MIDDLE CIRCLE - YELLOW
BOTTOM CIRCLE - GREEN
COPY & BORDER - BLACK
BACKGROUND - FLUORESCENT ORANGE

AREA (SQ. FT)	SIZE (INCHES)	CONN. D.O.T. #	POSTS
9.0	36	80-9052	1
16.0	48	80-9053	2

W4-W6 - SERIES

W4-2

(L) (R)

AREA (SQ. FT)	SIZE (INCHES)	CONN. D.O.T. #	POSTS
16.0	48	80-9918L	2
16.0	48	80-9917R	2

W6-3

AREA (SQ. FT)	SIZE (INCHES)	CONN. D.O.T. #	POSTS
16.0	48	80-9945	2

W8-W9 - SERIES

W8-1

BUMP

AREA (SQ. FT)	SIZE (INCHES)	CONN. D.O.T. #	POSTS
9.0	36	80-9901	1
16.0	48	80-9902	2

BUMP AHEAD

AREA (SQ. FT)	SIZE (INCHES)	CONN. D.O.T. #	POSTS
9.0	36	80-9801	1
16.0	48	80-9802	2

W9-2

LANE ENDS MERGE LEFT (L)
LANE ENDS MERGE RIGHT (R)

AREA (SQ. FT)	SIZE (INCHES)	CONN. D.O.T. #	POSTS
16.0	48	80-9910L	2
16.0	48	80-9911R	2

W13 - SERIES

W13-1

00 M.P.H.

SUBPLATE
VARIABLE SPEED

AREA (SQ. FT)	SIZE (INCHES)	CONN. D.O.T. #	POSTS
4.0	24	80-9569	1
6.25	30	80-9567	1

REDUCE SPEED TO 00 MPH

VARIABLE SPEED

AREA (SQ. FT)	SIZE (INCHES)	CONN. D.O.T. #	POSTS
9.0	36	80-9506	1
16.0	48	80-9508	2

W3-5

SPEED LIMIT 00

VARIABLE SPEED

AREA (SQ. FT)	SIZE (INCHES)	CONN. D.O.T. #	POSTS
9.0	36	80-9520	1
16.0	48	80-9521	2

W-16 - SERIES

W16-15P

NEW

COPY & BORDER - BLACK
BACKGROUND - ORANGE

AREA (SQ. FT)	SIZE (INCHES)	CONN. D.O.T. #	POSTS
2.0	24X12	80-9049	

W20 - SERIES

W20-1

ROAD WORK AHEAD

AREA (SQ. FT)	SIZE (INCHES)	CONN. D.O.T. #	POSTS
6.25	30	80-9602	1
9.0	36	80-9603	1
16.0	48	80-9604	2

LEFT LANES CLOSED (L)
RIGHT LANES CLOSED (R)

	AREA (SQ. FT)	SIZE (INCHES)	CONN. D.O.T. #	POSTS
(L)	16.0	48	80-9836	2
(R)	16.0	48	80-9839	2

W20-7a

AREA (SQ. FT)	SIZE (INCHES)	CONN. D.O.T. #	POSTS
9.0	36	80-9803	1
16.0	48	80-9804	2

W20-1

ROAD WORK 0000 FT

VARIABLE DISTANCE

AREA (SQ. FT)	SIZE (INCHES)	CONN. D.O.T. #	POSTS
9.0	36	80-9614	1
16.0	48	80-9615	2

LEFT TWO LANES CLOSED AHEAD (L)
RIGHT TWO LANES CLOSED AHEAD (R)

	AREA (SQ. FT)	SIZE (INCHES)	CONN. D.O.T. #	POSTS
(L)	16.0	48	80-9837	2
(R)	16.0	48	80-9838	2

SLOW MOVING TRUCKS AHEAD

AREA (SQ. FT)	SIZE (INCHES)	CONN. D.O.T. #	POSTS
32.0	96X48	80-9815	2

W20-2

DETOUR 1000 FT

AREA (SQ. FT)	SIZE (INCHES)	CONN. D.O.T. #	POSTS
9.0	36	80-9805	1
16.0	48	80-9806	2

LEFT LANE CLOSED AHEAD (L)
RIGHT LANE CLOSED AHEAD (R)

	AREA (SQ. FT)	SIZE (INCHES)	CONN. D.O.T. #	POSTS
(L)	16.0	48	80-9847	2
(R)	16.0	48	80-9848	2

W16-9P

AHEAD

AREA (SQ. FT)	SIZE (INCHES)	CONN. D.O.T. #	POSTS
2.0	24X12	80-9870	
3.75	30X18	80-9871	

ONE LANE ROAD AHEAD

AREA (SQ. FT)	SIZE (INCHES)	CONN. D.O.T. #	POSTS
9.0	36	80-9834	1
16.0	48	80-9835	2

LEFT LANE CLOSED (L)
RIGHT LANE CLOSED (R)

	AREA (SQ. FT)	SIZE (INCHES)	CONN. D.O.T. #	POSTS
(L)	16.0	48	80-9846	2
(R)	16.0	48	80-9849	2

W16-3aP

1 MILE

VARIABLE MILEAGE

AREA (SQ. FT)	SIZE (INCHES)	CONN. D.O.T. #	POSTS
2.5	30X12	80-9872	
4.5	36X18	80-9873	

W21 - SERIES

W21-6

SURVEY CREW

AREA (SQ. FT)	SIZE (INCHES)	CONN. D.O.T. #	POSTS
9.0	36	80-9607	1

W22 - SERIES

W22-1

BLASTING ZONE 1000 FT

AREA (SQ. FT)	SIZE (INCHES)	CONN. D.O.T. #	POSTS
9.0	36	80-9620	1
16.0	48	80-9625	2

W22-2

TURN OFF 2-WAY RADIO AND CELL PHONE

AREA (SQ. FT)	SIZE (INCHES)	CONN. D.O.T. #	POSTS
10.5	42X36	80-9623	2

W22-3

END BLASTING ZONE

AREA (SQ. FT)	SIZE (INCHES)	CONN. D.O.T. #	POSTS
10.5	42X36	80-9621	2

(VARIABLE LEGEND)

AREA (SQ. FT)	SIZE (INCHES)	CONN. D.O.T. #	POSTS
4.17	60X10	80-9913	2
12.0	96X18	80-9914	2
3.33	48X10	80-9916	2

BLANK OR VARIABLE LEGEND

AREA (SQ. FT)	SIZE (INCHES)	CONN. D.O.T. #	POSTS
9.0	36	80-9933	1
16.0	48	80-9934	2

USE SHOULDER

AREA (SQ. FT)	SIZE (INCHES)	CONN. D.O.T. #	POSTS
16.0	48	80-9956	2

(VARIABLE LEGEND)

AREA (SQ. FT)	SIZE (INCHES)	CONN. D.O.T. #	POSTS
12.5	60X30	80-9928	2
24.0	72X48	80-9929	2

SHOULDER CLOSED AHEAD (1)
SHOULDER CLOSED (2)

	AREA (SQ. FT)	SIZE (INCHES)	CONN. D.O.T. #	POSTS
(1)	16.0	48	80-9957	2
(2)	9.0	36	80-9958	1
(2)	16.0	48	80-9959	2

STOP-SLOW PADDLE

SIDE A: STOP
SIDE B: SLOW

SIDE A
BACKGROUND - RED
COPY & BORDER - WHITE
SIDE B
BACKGROUND - ORANGE
COPY & BORDER - BLACK PLAIN

	AREA (SQ. FT)	SIZE (INCHES)	CONN. D.O.T. #	POSTS
	2.25	18	80-9950	PADDLE

NOTES:
1. R1-SERIES SIGN THE LEGEND "O.S.T.A." SHALL APPEAR.
2. POSTS - SEE STANDARD SHEET TR-1208_02 - "METAL SIGN POSTS AND SIGN MOUNTING DETAILS".
3. POSTS SHALL BE 4 LBS./FT.
4. ALL POSTS NOTED ARE FOR LONG TERM INSTALLATION. SEE STANDARD SHEET TR-1208_02.
5. FOR TEMPORARY SUPPORTS SEE STANDARD SHEET TR-1220_02 - "CONSTRUCTION SIGN SUPPORTS AND CHANNELIZING DEVICES".
6. FOR SPECIFIC SIGN DESIGN, CONTACT CONN. D.O.T., DIVISION OF TRAFFIC ENGINEERING. FOR BOLT HOLE PATTERN REFER TO FHWA PUBLICATION "STANDARD HIGHWAY SIGNS". SIGNS OF DIFFERENT DIMENSIONS TO BE ERECTED ON THE SAME POSTS, OR SPAN/MAST ARM MOUNTED, MAY REQUIRE SPECIAL BOLT HOLE PATTERNS.
7. ALL CONSTRUCTION SIGNS TO BE PAID FOR UNDER THE CONSTRUCTION SIGNS ITEM IN THE CONTRACT.
8. MATERIALS & COLORS SHALL CONFORM TO STATE SPECIFICATIONS.

MATERIALS:
SIGNS AND THEIR PORTABLE SUPPORTS SHALL CONFORM TO THE REQUIREMENTS OF NCHRP REPORT 350 (TL-3) OR THE AASHTO MASH FOR CATEGORY 2 DEVICES. ALUMINUM THICKNESS FOR POST MOUNTED SIGNS SHALL BE .100" EXCEPT SIGN #s. 80-1605, 80-9914, 80-9815, 80-9728, 80-9519, & 51-6147 (L OR R) WHICH SHALL BE .125", PLYWOOD THICKNESS FOR POST MOUNTED SIGNS SHALL BE 1/2" EXTERIOR GRADE A-C OR BETTER. SIGN BLANKS SHALL HAVE ONE COAT OF PRIMER PAINT PRIOR TO APPLICATION OF RETROREFLECTIVE SHEETING & COPY.

COLORS:
BACKGROUND - FLUORESCENT ORANGE - EXCEPT AS NOTED.
LEGEND - BLACK - EXCEPT AS NOTED.
ALL SIGNS WITH FLUORESCENT ORANGE BACKGROUND TO USE TYPE VIII RETROREFLECTIVE SHEETING.
ALL OTHER SIGNS TO USE TYPE IX RETROREFLECTIVE SHEETING.

REV.	DATE	REVISION DESCRIPTION
6	8-2018	REVISED POST REQUIREMENTS AND SHEETING TYPE.
5	8-2015	UPDATED PER MUTCD AND FORM 816 JAN 2015 REVISION.
4	6-2012	REVISED NOTE #1 TO REFERENCE "O.S.T.A."
3	4-2012	REVISED NEW SIGNAL SIGN(S) TO CONFORM TO 2009 MUTCD.
2	2-2011	MINOR REVISIONS.
1	3-2010	REMOVED OBSOLETE SIGNS (50-5925, 50-5935).

THE INFORMATION, INCLUDING ESTIMATED QUANTITIES OF WORK, SHOWN ON THESE SHEETS IS BASED ON LIMITED INVESTIGATIONS BY THE STATE AND IS IN NO WAY WARRANTED TO INDICATE THE CONDITIONS OF ACTUAL QUANTITIES OF WORK WHICH WILL BE REQUIRED.

Plotted Date: 8/10/2018

NOT TO SCALE

STATE OF CONNECTICUT
DEPARTMENT OF TRANSPORTATION

Filename: TR-1220_01_1_2018.dgn Model: TR-1220_01

SUBMITTED BY: NAME/DATE/TIME: Mark F. Makuch, P.E. 2018.08.17 09:11:08-04'00'
APPROVED BY: NAME/DATE/TIME: Mark F. Carlino, P.E. 2018.08.21 07:49:34-04'00'

CTDOT STANDARD SHEET

OFFICE OF ENGINEERING

STANDARD SHEET TITLE:

SIGNS FOR CONSTRUCTION AND PERMIT OPERATIONS

STANDARD SHEET NO.: TR-1220_01

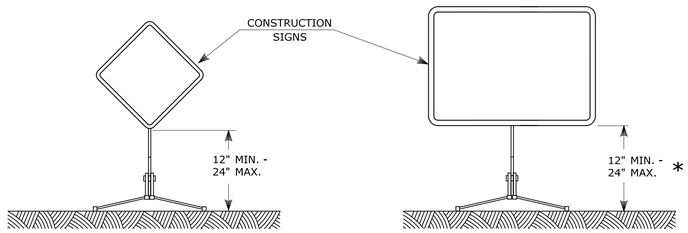

DIAMOND SHAPE **RECTANGLE SHAPE**

PORTABLE CONSTRUCTION SIGNS

NOTES FOR PORTABLE SIGN SUPPORTS:

1. SIGNS AND THEIR PORTABLE SUPPORTS SHALL CONFORM TO THE REQUIREMENTS OF NCHRP REPORT 350 (TL-3) OR THE AASHTO MASH FOR CATEGORY 2 DEVICES AND THE LATEST EDITION OF THE MUTCD.
2. MOUNTING HEIGHT OF SIGNS SHALL BE A MINIMUM OF 12" AND A MAXIMUM OF 24". SIGNS SHALL BE MOUNTED HIGHER AS NEEDED TO MEET FIELD CONDITIONS OR AS DIRECTED BY THE ENGINEER.
3. THE ENGINEER RESERVES THE RIGHT TO REJECT ANY SUPPORT DEEMED UNSUITABLE FOR THE PURPOSE INTENDED.
4. PORTABLE SIGN SUPPORTS SHALL BE STABILIZED IN A MANNER THAT WILL NOT AFFECT THEIR COMPLIANCE WITH NCHRP REPORT 350 (TL-3) OR THE AASHTO MASH FOR CATEGORY 2 DEVICES.
5. PORTABLE CONSTRUCTION SIGN SUPPORTS SHOULD NOT BE USED FOR DURATION OF MORE THAN 3 DAYS EXCEPT FOR R9-8 THROUGH R9-11a SERIES, R11 SERIES, W1-6 THROUGH W1-8 SERIES, M4-10, AND E5-1. SEE STANDARD SHEET TR-1220_01 - "SIGNS FOR CONSTRUCTION AND PERMIT OPERATIONS" FOR SIGN DETAILS.

* FOR E5-1 (EXIT SIGNS) USE MIN 48".

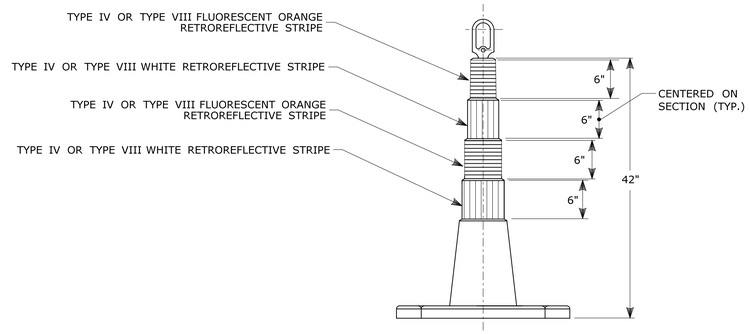

42" TRAFFIC CONE

NOTES:

1. TRAFFIC CONES SHALL CONFORM TO THE REQUIREMENTS OF NCHRP REPORT 350 (TL-3) OR THE AASHTO MASH FOR CATEGORY 1 DEVICES AND THE LATEST EDITION OF THE MUTCD.
2. IF RUBBER CONES ARE USED, THEY SHALL HAVE INTERIOR RIBS FOR RIGIDITY.
3. IF PLASTIC CONES ARE USED, THEY SHALL BE COLOR IMPREGNATED.
4. THE ENGINEER RESERVES THE RIGHT TO REJECT ANY CONE DEEMED UNSUITABLE FOR THE PURPOSE INTENDED.
5. THE ENTIRE AREA OF FLUORESCENT ORANGE AND WHITE STRIPES SHALL BE RETROREFLECTIVE SHEETING AS REQUIRED IN THE SPECIFICATIONS.
6. THE SECTIONS OF CONES NOT COVERED WITH RETROREFLECTIVE STRIPES SHALL BE ORANGE.

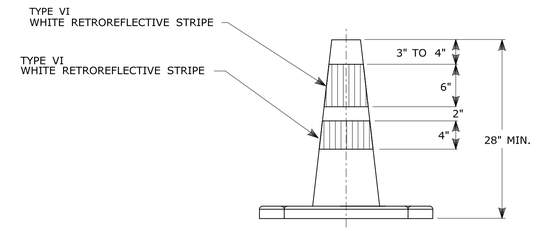

TRAFFIC CONE

NOTES:

1. TRAFFIC CONES SHALL CONFORM TO THE REQUIREMENTS OF NCHRP REPORT 350 (TL-3) OR THE AASHTO MASH FOR CATEGORY 1 DEVICES AND THE LATEST EDITION OF THE MUTCD.
2. IF RUBBER CONES ARE USED, THEY SHALL HAVE INTERIOR RIBS FOR RIGIDITY.
3. IF PLASTIC CONES ARE USED, THEY SHALL BE COLOR IMPREGNATED.
4. THE ENGINEER RESERVES THE RIGHT TO REJECT ANY CONE DEEMED UNSUITABLE FOR THE PURPOSE INTENDED.
5. THE ENTIRE AREA OF WHITE STRIPES SHALL BE RETROREFLECTIVE SHEETING AS REQUIRED IN THE SPECIFICATIONS.
6. TRAFFIC CONES NOT USED AT NIGHT MAY UTILIZE TYPE III SHEETING.
7. THE SECTIONS OF CONES NOT COVERED WITH RETROREFLECTIVE STRIPES SHALL BE ORANGE.

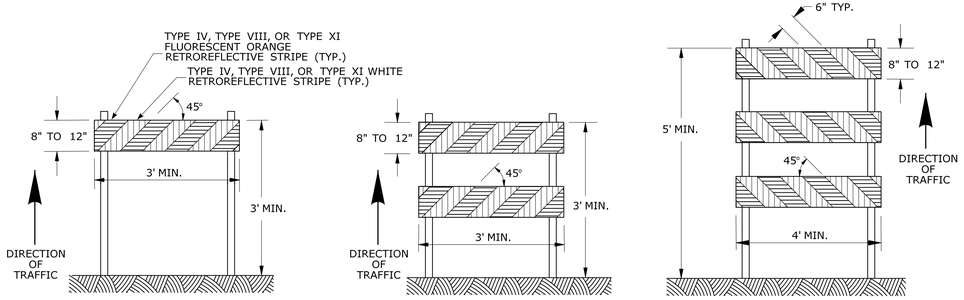

TYPE I BARRICADE **TYPE II BARRICADE** **TYPE III BARRICADE**

CONSTRUCTION BARRICADES

NOTES:

1. CONSTRUCTION BARRICADES SHALL CONFORM TO THE REQUIREMENTS OF NCHRP REPORT 350 (TL-3) OR THE AASHTO MASH AND THE LATEST EDITION OF THE MUTCD.
2. MARKINGS FOR BARRICADE RAILS SHALL BE ALTERNATE FLUORESCENT ORANGE AND WHITE STRIPES SLOPING DOWNWARD IN THE DIRECTION TRAFFIC IS TO PASS. 6" WIDE STRIPES SHALL BE USED.
3. THE ENTIRE AREA OF FLUORESCENT ORANGE AND WHITE STRIPES SHALL BE RETROREFLECTIVE SHEETING AS REQUIRED IN THE SPECIFICATIONS. THE SIDES OF BARRICADES FACING TRAFFIC SHALL HAVE RETROREFLECTIVE RAIL FACES.
4. THE ENGINEER RESERVES THE RIGHT TO REJECT ANY BARRICADE DEEMED UNSUITABLE FOR THE PURPOSE INTENDED.
5. CORNERS OF BARRICADE RAILS SHALL BE ROUNDED.
6. SIGNS MAY ONLY BE INSTALLED ON TYPE III BARRICADES AND SHALL BE PLACED SO AS TO COVER NO MORE THAN ONE BARRICADE RAIL.

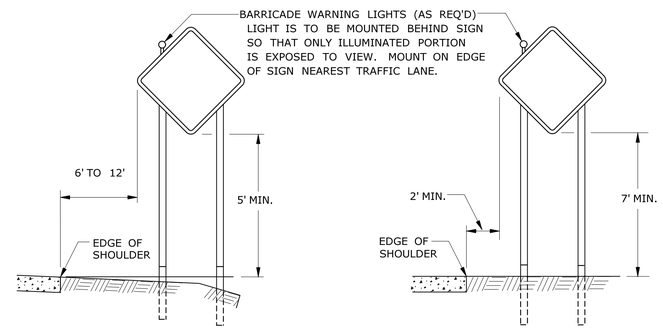

RURAL AREA **URBAN AREA**

PLACEMENT OF CONSTRUCTION SIGNS
TYPICAL LONG TERM INSTALLATION

NOTES:

SUPPORTS SHALL BE METAL SIGN POSTS AND HAVE BREAK-AWAY FEATURES.

REFER TO STANDARD SHEETS:
TR-1208_01 - "SIGN PLACEMENT AND RETROREFLECTIVE STRIP DETAILS."
TR-1208_02 - "METAL SIGN POSTS AND SIGN MOUNTING DETAILS."

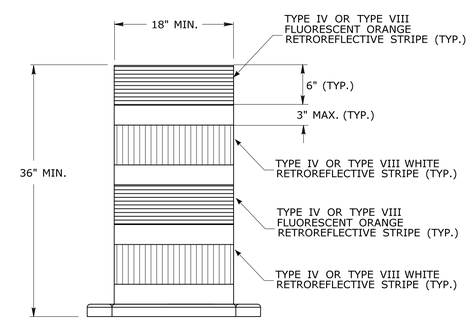

TRAFFIC DRUM
FRONT VIEW

NOTES:

1. TRAFFIC DRUM SHALL CONFORM TO THE REQUIREMENTS OF NCHRP REPORT 350 (TL-3) OR THE AASHTO MASH FOR CATEGORY 1 DEVICES AND THE LATEST EDITION OF THE MUTCD.
2. THE ENGINEER RESERVES THE RIGHT TO REJECT ANY DRUM DEEMED UNSUITABLE FOR THE PURPOSE INTENDED.
3. THE ENTIRE AREA OF FLUORESCENT ORANGE AND WHITE STRIPES SHALL BE RETROREFLECTIVE SHEETING AS REQUIRED IN THE SPECIFICATIONS.
4. THE SECTIONS OF DRUMS NOT COVERED WITH RETROREFLECTIVE STRIPES SHALL BE ORANGE.

REV.	DATE	REVISION DESCRIPTION
3	8-2018	UPDATED SHEETING TYPE AND COLOR.
2	8-2015	UPDATED PER MUTCD AND FORM 816 JAN 2015 REVISION.
1	2-2011	MINOR REVISIONS.

THE INFORMATION, INCLUDING ESTIMATED QUANTITIES OF WORK, SHOWN ON THESE SHEETS IS BASED ON LIMITED INVESTIGATIONS BY THE STATE AND IS IN NO WAY WARRANTED TO INDICATE THE CONDITIONS OF ACTUAL QUANTITIES OF WORK WHICH WILL BE REQUIRED.

Plotted Date: 8/10/2018

NOT TO SCALE

STATE OF CONNECTICUT
DEPARTMENT OF TRANSPORTATION

Filename: TR-1220_02_3_2018.dgn Model: TR-1220_02

SUBMITTED BY: NAME/DATE/TIME: Mark F. Makuch, P.E. 2018.08.17 09:12:43-04'00'
APPROVED BY: NAME/DATE/TIME: Mark F. Carlino, P.E. 2018.08.21 07:49:51-04'00'

CTDOT STANDARD SHEET

OFFICE OF ENGINEERING

STANDARD SHEET TITLE:
CONSTRUCTION SIGN SUPPORTS AND CHANNELIZING DEVICES

STANDARD SHEET NO.: TR-1220_02